Coaxial Isolator

NCI-1000-2000-K2-K2-N-1

1~2GHz

Features:
* Broadband
* High Power
* Low Insertion Loss

Applications:
* Wireless
* Radar
* Laboratory Test

Electrical

Frequency:	1~2GHz
Insertion Loss:	0.7dB max.
Isolation:	15dB min.
VSWR:	1.45 max.
Forward Power:	200W
Reverse Power:	200W

Mechanical

Size[*1]:	70*80*21mm
	2.756*3.15*0.827in
Direction:	Clockwise
RF Connectors:	N Female
Mounting:	4-Φ4.2mm through-hole

[1] Exclude connectors and termination.

Environmental

Temperature:	0~+60°C

Outline Drawings

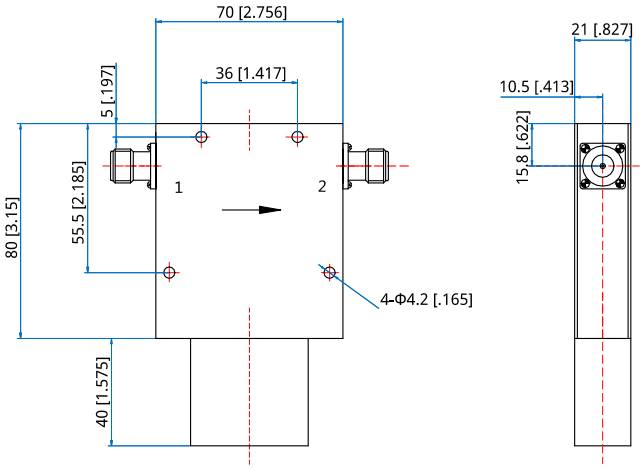

Unit: mm [in]
Tolerance: ±0.15mm [±0.006in]

How To Order

NCI-1000-2000-K2-K2-N-1

Customization is available upon request.

Coaxial Isolator

NCI-1000-2000-K3-K2-N-1

1~2GHz, 300W/200W, N Female, Clockwise

Features:
* Broadband
* High Power
* Low Insertion Loss

Applications:
* Wireless
* Radar
* Laboratory Test

Electrical

Frequency:	1~2GHz
VSWR:	1.6 max.
Insertion Loss:	0.6dB max.
Isolation:	16dB min.
Forward Power:	300W
Reverse Power:	200W

Mechanical

Size[*1]:	64*66*26mm 2.52*2.598*1.024in
RF Connectors:	N Female
Mounting:	3-M2.5, depth 4mm
Direction:	Clockwise

[1] Exclude connectors and terminations.

Environmental

Operating Temperature:	-20~+60°C
Non-operating Temperature:	-55~+85°C

Outline Drawings

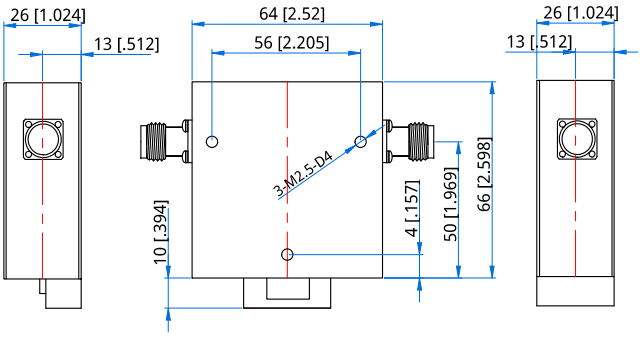

Unit: mm [in]
Tolerance: ±0.2mm [±0.008in]

How To Order

NCI-1000-2000-K3-K2-N-1

Customization is available upon request.

NCI1017C

High Power, High Isolation

Features:
* High Power
* High Isolation
* Low Insertion Loss
* Low VSWR

Applications:
* Wireless
* Radar
* Laboratory Test

Description

NCI1017C series Coaxial Isolators cover frequency range 17~31GHz. High power, high isolation and low insertion loss make it ideal for a lot of applications like amplifiers, transceivers, etc.

Specifications

Frequency (MHz)	Bandwidth (MHz)	IL (dB Max.)	Isolation (dB Min.)	VSWR (Max.)	Fwd Power (W Max.)	Rev Power (W)	Connector	Temperature (°C)
17000~20500	3500	0.60	20.0	1.30	10	5	2.92mm	-10~+60
17300~22300	5000	0.80	20.0	1.30	10	5	2.92mm	-10~+60
18000~26500	8500	0.90	20.0	1.30	10	2	2.92mm	-10~+60
22000~28000	6000	1.20	20.0	1.30	5	1	2.92mm	-10~+60
25000~28000	3000	1.00	20.0	1.30	5	1	2.92mm	-10~+60
27000~31000	4000	1.00	20.0	1.30	5	1	2.92mm	-10~+60

Outline Drawings

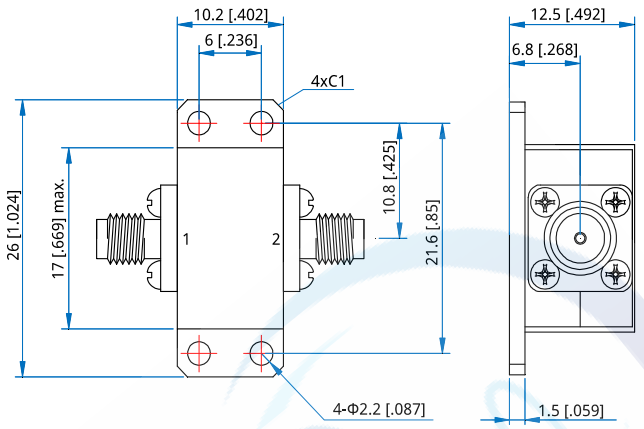

Unit: mm [inch] Tolerance: ±0.2mm [±0.008in]

Mechanical

Size[*1]: 10.2*17*12.5mm
0.402*0.669*0.492in
Mounting: 4-Φ2.2mm through-hole

[1] Exclude connectors and terminations.

How To Order

NCI1017C-U-V-W-X-Y-Z

U: Start frequency in MHz
V: Stop frequency in MHz
W: Forward power in W
X: Reverse power in W
Y: Connector type
Z: Direction type

Connector Naming Rules:

K - 2.92mm Female

Direction Naming Rules:

1 - Clockwise
2 - Anticlockwise

Examples:
To order a NCI1017C series Isolator, 17~20.5GHz, Forward power 10W, Reverse power 5W, 2.92mm female, Clockwise, specify NCI1017C-17000-20500-10-5-K-1.

Customization is available upon request.

Dual Junction Coaxial Isolators

NCI10458E

High Power, High Isolation

Features:
* High Power
* High Isolation
* Low Insertion Loss
* Low VSWR

Applications:
* Wireless
* Radar
* Laboratory Test

Description

NCI10458E series Coaxial Isolators cover frequency range 180~860MHz. High power, high isolation and low insertion loss make it ideal for a lot of applications like amplifiers, transceivers, etc.

Specifications

Frequency (MHz)	Bandwidth (MHz)	IL (dB Max.)	Isolation (dB Min.)	VSWR (Max.)	Fwd Power*1 (W Max.)	Rev Power (W)	Connector	Temperature (°C)
180~200	20	1.0	38.0	1.30	300	10~100	SMA, N	-30~+70
200~220	20	0.8	40.0	1.20	300	10~100	SMA, N	-30~+70
220~240	20	0.8	40.0	1.20	300	10~100	SMA, N	-30~+70
260~280	20	0.8	45.0	1.20	300	10~100	SMA, N	-30~+70
300~360	60	1.0	40.0	1.25	300	10~100	SMA, N	-30~+70
360~400	40	1.0	40.0	1.25	300	10~100	SMA, N	-30~+70
390~400	10	0.6	50.0	1.25	300	10~100	SMA, N	-30~+70
420~430	10	0.6	50.0	1.20	300	10~100	SMA, N	-30~+70
430~470	40	0.8	45.0	1.20	300	10~100	SMA, N	-30~+70
460~470	10	0.6	50.0	1.20	300	10~100	SMA, N	-30~+70
851~866	15	0.6	50.0	1.20	300	10~100	SMA, N	-30~+70

[1] The connector is SMA, and the maximum forward power can only reach 100W.

Outline Drawings

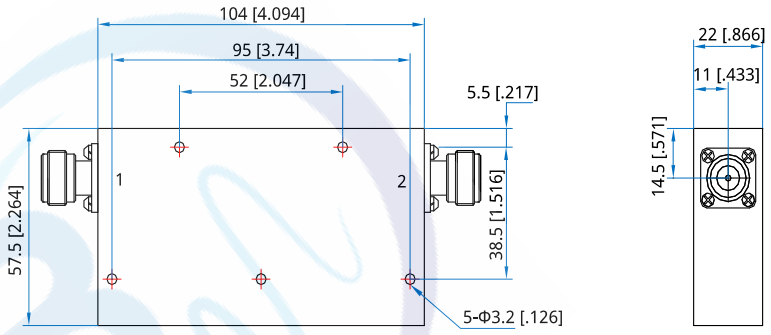

Unit: mm [inch] Tolerance: ±0.2mm [±0.008in]

Mechanical

Size*2: 104*57.5*22mm
4.094*2.264*0.866in
Mounting: 5-Φ3.2mm through-hole

[2] Exclude connectors and terminations.

Connector Naming Rules:

N - N Female

Direction Naming Rules:

1 - Clockwise
2 - Anticlockwise

How To Order

NCI10458E-U-V-W-X-Y-Z

U: Start frequency in MHz
V: Stop frequency in MHz
W: Forward power in W
X: Reverse power in W
Y: Connector type
Z: Direction type

Examples:
To order a NCI10458E series Isolator, 180~200MHz, Forward power 300W, Reverse power 100W, N female, Clockwise, specify NCI10458E-180-200--K3-K1-N-1.

Customization is available upon request.

Dual Junction Coaxial Isolators

NCI12060E

High Power, High Isolation

Features:
* High Power
* High Isolation
* Low Insertion Loss
* Low VSWR

Applications:
* Wireless
* Radar
* Laboratory Test

Description

NCI12060E series Coaxial Isolators cover frequency range 117~400MHz. High power, high isolation and low insertion loss make it ideal for a lot of applications like amplifiers, transceivers, etc.

Specifications

Frequency (MHz)	Bandwidth (MHz)	IL (dB Max.)	Isolation (dB Min.)	VSWR (Max.)	Fwd Power (W Max.)	Rev Power (W)	Connector	Temperature (°C)
117~137	20	1.0	50.0	1.25	200	200	N	0~+60
225~400	175	1.6	34.0	1.35	100	20*1	SMA	0~+60

[1] Built-in resistor, user solves heat dissipation problems.

Outline Drawings

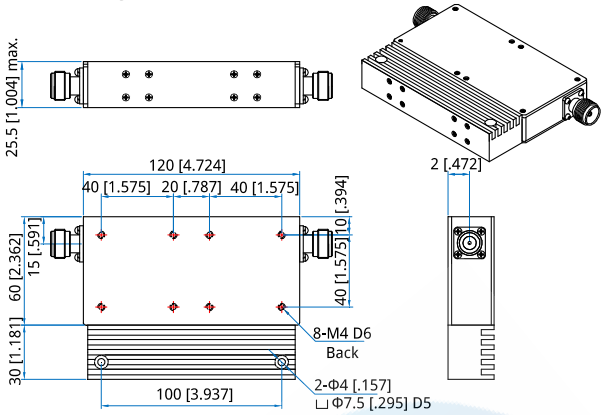

Outline A

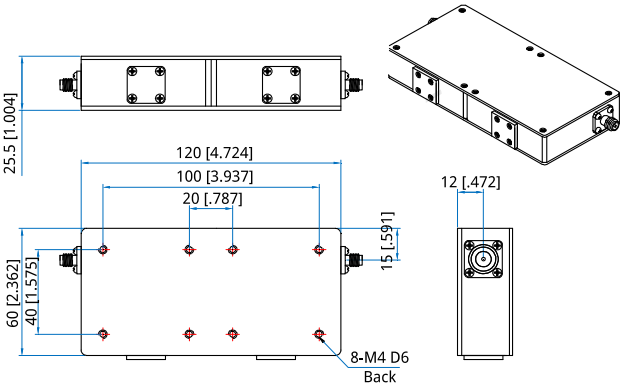

Outline B

Unit: mm [inch] Tolerance: ±0.2mm [±0.008in]

Mechanical

Size*2: 120*60*25.5mm
4.724*2.362*1.004in
Mounting: 8-M4, depth 6mm

[2] Exclude connectors and terminations.

Connector Naming Rules:

N - N Female (Outline A)
S - SMA Female (Outline B)

Direction Naming Rules:

1 - Clockwise
2 - Anticlockwise

How To Order

NCI12060E-U-V-W-X-Y-Z

U: Start frequency in MHz
V: Stop frequency in MHz
W: Forward power in W
X: Reverse power in W
Y: Connector type
Z: Direction type

Examples:
To order a NCI12060E series Isolator, 225~400MHz, Forward power 100W, Reverse power 20W, N female, Clockwise, specify NCI12060E-225-400-K1-20-S-1.

Customization is available upon request.

NCI12060H

High Power, High Isolation

Features:
* High Power
* High Isolation
* Low Insertion Loss
* Low VSWR

Applications:
* Wireless
* Radar
* Laboratory Test

Description

NCI12060H series Coaxial Isolators cover frequency range 70~230MHz. High power, high isolation and low insertion loss make it ideal for a lot of applications like amplifiers, transceivers, etc.

Specifications

Frequency (MHz)	Bandwidth (MHz)	IL (dB Max.)	Isolation (dB Min.)	VSWR (Max.)	Fwd Power*1 (W Max.)	Rev Power (W)	Connector	Temperature (°C)
70~80	10	2.0	40.0	1.30	150	10~100	SMA, N	-30~+70
88~108	20	1.2	40.0	1.20	150	10~100	SMA, N	-30~+70
108~112	4	1.2	45.0	1.20	150	10~100	SMA, N	-30~+70
110~120	10	1.2	45.0	1.20	150	10~100	SMA, N	-30~+70
117~138	21	1.2	40.0	1.20	150	10~100	SMA, N	-30~+70
130~170	40	1.3	40.0	1.30	150	10~100	SMA, N	-30~+70
135~145	10	1.0	45.0	1.25	150	10~100	SMA, N	-30~+70
136~174	38	1.2	40.0	1.20	150	10~100	SMA, N	-30~+70
140~160	20	1.0	45.0	1.20	150	10~100	SMA, N	-30~+70
150~180	30	1.2	40.0	1.20	150	10~100	SMA, N	-30~+70
157~168	11	1.0	50.0	1.20	150	10~100	SMA, N	-30~+70
160~190	30	1.2	40.0	1.20	150	10~100	SMA, N	-30~+70
174~230	56	1.2	40.0	1.20	150	10~100	SMA, N	-30~+70

[1] The connector is SMA, and the maximum forward power can only reach 100W.

Outline Drawings

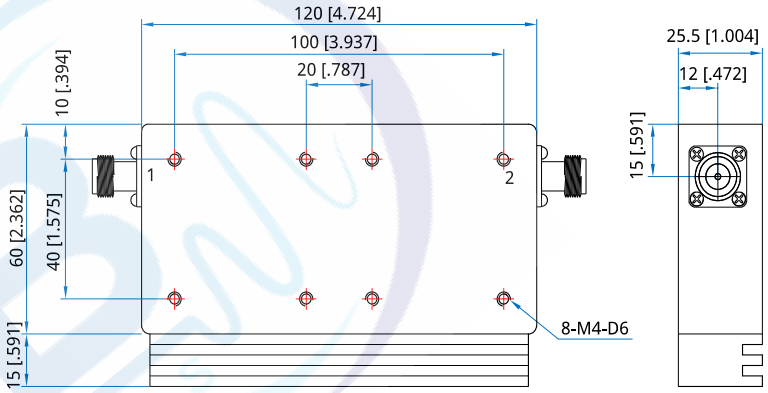

Unit: mm [inch] Tolerance: ±0.2mm [±0.008in]

Mechanical

Size*2:	120*60*25.5mm
	4.724*2.362*1.004in
Mounting:	8-M4, depth 6mm

[2] Exclude connectors and terminations.

Connector Naming Rules:

N - N Female

Direction Naming Rules:

1 - Clockwise

2 - Anticlockwise

How To Order

NCI12060H-U-V-W-X-Y-Z

U: Start frequency in MHz

V: Stop frequency in MHz

W: Forward power in W

X: Reverse power in W

Y: Connector type

Z: Direction type

Examples:

To order a NCI12060H series Isolator, 70~80MHz, Forward power 150W, Reverse power 100W, N female, Clockwise,, specify NCI12060H-70-80-K15-K1-N-1.

Customization is available upon request.

NCI1220C

High Power, High Isolation

Features:
* High Power
* High Isolation
* Low Insertion Loss
* Low VSWR

Applications:
* Wireless
* Radar
* Laboratory Test

Description

NCI1220C series Coaxial Isolators cover frequency range 9~16.5GHz. High power, high isolation and low insertion loss make it ideal for a lot of applications like amplifiers, transceivers, etc.

Specifications

Frequency (MHz)	Bandwidth (MHz)	IL (dB Max.)	Isolation (dB Min.)	VSWR (Max.)	Fwd Power (W Max.)	Rev Power (W)	Connector	Temperature (°C)
9300~9500	200	0.30	23.0	1.25	30	5	SMA	-30~+70
10500~12500	2000	0.40	20.0	1.25	30	5	SMA	-30~+70
10700~12750	2050	0.50	20.0	1.25	20	5	SMA	-30~+70
10700~12800	2100	0.40	20.0	1.25	30	5	SMA	-30~+70
12700~14900	2200	0.50	19.0	1.30	30	5	SMA	-30~+70
14500~16500	2000	0.40	20.0	1.25	30	5	SMA	-30~+70

Outline Drawings

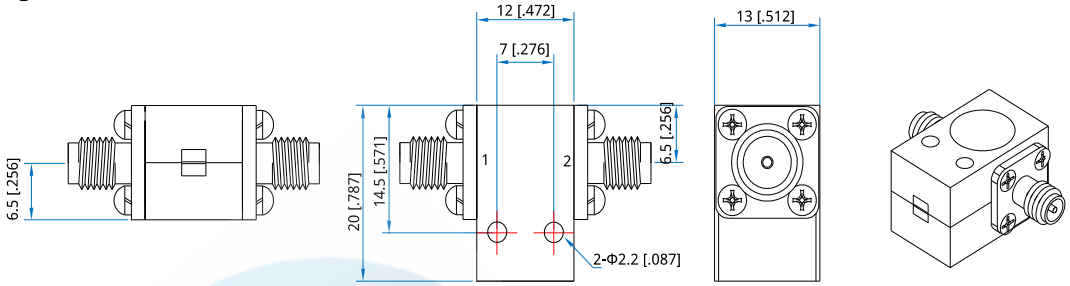

Unit: mm [inch] Tolerance: ±0.2mm [±0.008in]

Mechanical

Size*1: 12*20*13mm
0.472*0.787*0.512in
Mounting: 2-Φ2.2mm through-hole

[1] Exclude connectors and terminations.

Connector Naming Rules:

S - SMA Female

Direction Naming Rules:

1 - Clockwise
2 - Anticlockwise

How To Order

NCI1220C-U-V-W-X-Y-Z

U: Start frequency in MHz
V: Stop frequency in MHz
W: Forward power in W
X: Reverse power in W
Y: Connector type
Z: Direction type

Examples:
To order a NCI1220C series Isolator, 9.3~9.5GHz, Forward power 30W, Reverse power 5W, SMA female, Clockwise, specify NCI1220C-9300-9500-30-5-S-1.

Customization is available upon request.

Dual Junction Coaxial Isolators

NCI12762H

High Power, High Isolation

Features:
* High Power
* High Isolation
* Low Insertion Loss
* Low VSWR

Applications:
* Wireless
* Radar
* Laboratory Test

Description

NCI12762H series Coaxial Isolators cover frequency range 300~500MHz. High power, high isolation and low insertion loss make it ideal for a lot of applications like amplifiers, transceivers, etc.

Specifications

Frequency (MHz)	Bandwidth (MHz)	IL (dB Max.)	Isolation (dB Min.)	VSWR (Max.)	Fwd Power*1 (W Max.)	Rev Power (W)	Connector	Temperature (°C)
300~500	10	0.60	45.0	1.20	300	10~100	SMA, N	-30~+70
361~366	5	0.40	60.0	1.20	300	10~100	SMA, N	-30~+70
390~400	10	0.60	50.0	1.25	300	10~100	SMA, N	-30~+70
420~430	10	0.60	50.0	1.20	300	10~100	SMA, N	-30~+70
430~470	40	0.80	45.0	1.20	300	10~100	SMA, N	-30~+70
460~470	10	0.60	50.0	1.20	300	10~100	SMA, N	-30~+70

[1] The connector is SMA, and the maximum forward power can only reach 100W.

Outline Drawings

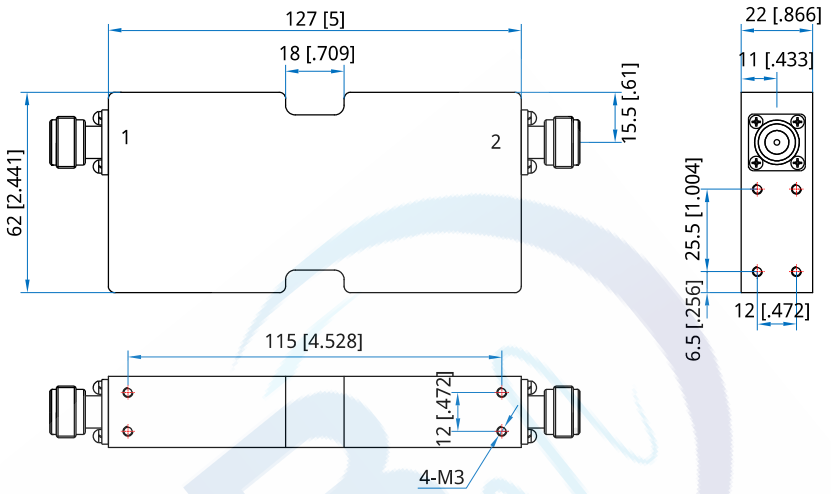

Unit: mm [inch] Tolerance: ±0.2mm [±0.008in]

Mechanical

Size*2: 127*62*22mm
5*2.441*0.866in
Mounting: 4-M3

[2] Exclude connectors and terminations.

Connector Naming Rules:

N - N Female

Direction Naming Rules:

1 - Clockwise
2 - Anticlockwise

How To Order

NCI12762H-U-V-W-X-Y-Z

U: Start frequency in MHz
V: Stop frequency in MHz
W: Forward power in W
X: Reverse power in W
Y: Connector type
Z: Direction type

Example
To order a NCI12762H series Isolator, 390~400MHz, Forward power 300W, Reverse power 100W, N female, Clockwise, specify NCI12762H-390-400-K3-K1-N-1.

Customization is available upon request.

NCI1319C

High Power, High Isolation

Features:
* High Power
* High Isolation
* Low Insertion Loss
* Low VSWR

Applications:
* Wireless
* Radar
* Laboratory Test

Description

NCI1319C series Coaxial Isolators cover frequency range 7~15GHz. High power, high isolation and low insertion loss make it ideal for a lot of applications like amplifiers, transceivers, etc.

Specifications

Frequency (MHz)	Bandwidth (MHz)	IL (dB Max.)	Isolation (dB Min.)	VSWR (Max.)	Fwd Power (W Max.)	Rev Power (W)	Connector	Temperature (°C)
7000~9000	2000	0.50	18.0	1.30	20	10	SMA	-10~+60
8000~12000	4000	0.50	18.0	1.30	20	10	SMA	-10~+60
9000~10200	1200	0.40	20.0	1.25	20	10	SMA	-10~+60
10000~11000	1000	0.30	23.0	1.20	20	10	SMA	-10~+60
10700~12700	2000	0.40	20.0	1.20	20	10	SMA	-10~+60

Outline Drawings

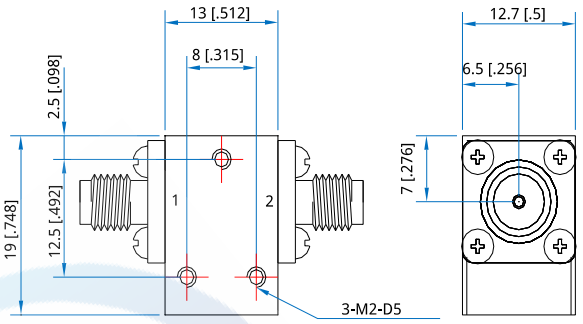

Unit: mm [inch] Tolerance: ±0.2mm [±0.008in]

Mechanical

Size*1:	13*19*12.7mm
	0.512*0.748*0.5in
Mounting:	3-M2, depth 5mm

[1] Exclude connectors and terminations.

Connector Naming Rules:

S - SMA Female

Direction Naming Rules:

1 - Clockwise
2 - Anticlockwise

Customization is available upon request.

How To Order

NCI1319C-U-V-W-X-Y-Z

U: Start frequency in MHz
V: Stop frequency in MHz
W: Forward power in W
X: Reverse power in W
Y: Connector type
Z: Direction type

Examples:
To order a NCI1319C series Isolator, 7.7~8.5GHz, Forward power 20W, Reverse power 10W, SMA female, Clockwise, specify NCI1319C-7700-8500-20-10-S-1.

NCI1523C

High Power, High Isolation

Features:
* High Power
* High Isolation
* Low Insertion Loss
* Low VSWR

Applications:
* Wireless
* Radar
* Laboratory Test

Description

NCI1523C series Coaxial Isolators cover frequency range 3600~7200MHz. High power, high isolation and low insertion loss make it ideal for a lot of applications like amplifiers, transceivers, etc.

Specifications

Frequency (MHz)	Bandwidth (MHz)	IL (dB Max.)	Isolation (dB Min.)	VSWR (Max.)	Fwd Power (W Max.)	Rev Power (W)	Connector	Temperature (°C)
3600~4200	600	0.50	18.0	1.30	60	10	SMA	-10~+60
4000~5000	1000	0.50	18.0	1.30	60	10	SMA	-10~+60
4500~5500	1000	0.40	20.0	1.25	60	10	SMA	-10~+60
5800~7200	1400	0.50	18.0	1.35	60	10	SMA	-10~+60

Outline Drawings

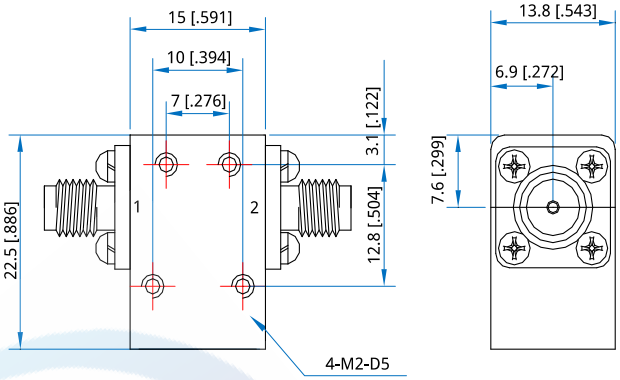

Unit: mm [inch] Tolerance: ±0.2mm [±0.008in]

Mechanical

Size*1: 15*22.5*13.8mm
0.591*0.886*0.543in
Mounting: 4-M2, depth 5mm

[1] Exclude connectors and terminations.

Connector Naming Rules:

S - SMA Female

Direction Naming Rules:

1 - Clockwise
2 - Anticlockwise

How To Order

NCI1523C-U-V-W-X-Y-Z

U: Start frequency in MHz
V: Stop frequency in MHz
W: Forward power in W
X: Reverse power in W
Y: Connector type
Z: Direction type

Examples:
To order a NCI1523C series Isolator, 3600~4200MHz, Forward power 60W, Reverse power 10W, SMA female, Clockwise, specify NCI1523C-3600-4200-60-10-S-1.

Customization is available upon request.

NCI16080H

High Power, High Isolation

Features:
* High Power
* High Isolation
* Low Insertion Loss
* Low VSWR

Applications:
* Wireless
* Radar
* Laboratory Test

Description

NCI16080H series Coaxial Isolators cover frequency range 380~470MHz. High power, high isolation and low insertion loss make it ideal for a lot of applications like amplifiers, transceivers, etc.

Specifications

Frequency (MHz)	Bandwidth (MHz)	IL (dB Max.)	Isolation (dB Min.)	VSWR (Max.)	Fwd Power*1 (W Max.)	Rev Power (W)	Connector	Temperature (°C)
380~400	20	1.0	70.0	1.25	300	100	SMA, N	-10~+60
380~420	40	1.0	60.0	1.25	300	100	SMA, N	-10~+60
400~420	20	1.0	70.0	1.20	300	100	SMA, N	-10~+60
400~440	40	1.0	60.0	1.25	300	100	SMA, N	-10~+60
400~470	70	1.2	60.0	1.25	300	100	SMA, N	-10~+60
430~440	10	1.0	75.0	1.20	300	100	SMA, N	-10~+60
460~470	10	0.8	75.0	1.20	300	100	SMA, N	-10~+60

[1] The connector is SMA, and the maximum forward power can only reach 100W.

Outline Drawings

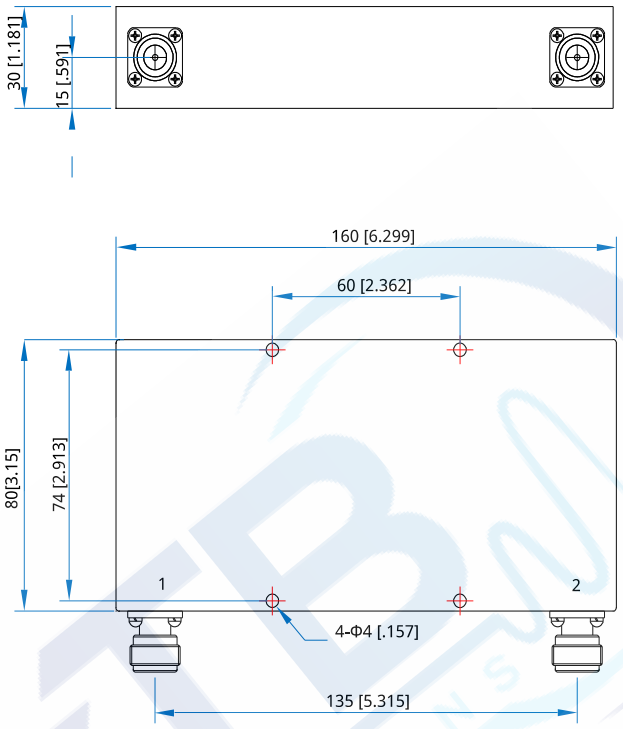

Unit: mm [inch] Tolerance: ±0.2mm [±0.008in]

Mechanical

Size*2:	160*80*30mm
	6.299*3.15*1.181in
Mounting:	4-Φ4mm through-hole

[2] Exclude connectors and terminations.

Connector Naming Rules:

N - N Female

Direction Naming Rules:

1 - Clockwise
2 - Anticlockwise

How To Order

NCI16080H-U-V-W-X-Y-Z

U: Start frequency in MHz
V: Stop frequency in MHz
W: Forward power in W
X: Reverse power in W
Y: Connector type
Z: Direction type

Examples:
To order a NCI16080H series Isolator, 380~400MHz, Forward power 300W, Reverse power 100W, N female, Clockwise, specify NCI16080H-380-400--K3-K1-N-1.

Customization is available upon request.

NCI1622B

High Power, High Isolation

Features:
* High Power
* High Isolation
* Low Insertion Loss
* Low VSWR

Applications:
* Wireless
* Radar
* Laboratory Test

Description

NCI1622B series Coaxial Isolators cover frequency range 6~18GHz. High power, high isolation and low insertion loss make it ideal for a lot of applications like amplifiers, transceivers, etc.

Specifications

Frequency (MHz)	Bandwidth (MHz)	IL (dB Max.)	Isolation (dB Min.)	VSWR (Max.)	Fwd Power (W Max.)	Rev Power (W)	Connector	Temperature (°C)
6000~18000	12000	1.50	9.50	2.00	20	10	SMA	0~+60
8000~18000	10000	1.40	12.0	1.60	30	10	SMA	0~+60
12000~18000	6000	0.80	17.0	1.40	30	10	SMA	0~+60

Outline Drawings

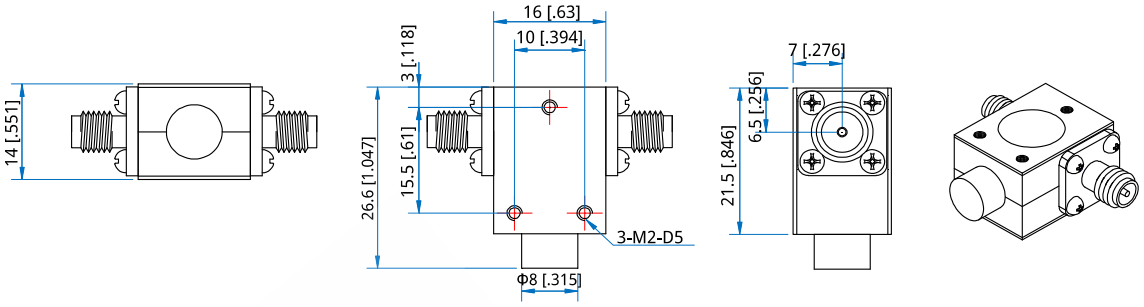

Unit: mm [inch] Tolerance: ±0.2mm [±0.008in]

Mechanical

Size[*1]: 16*21.5*14mm
0.63*0.846*0.551in
Mounting: 3-M2, depth 5mm

[1] Exclude connectors and terminations.

Connector Naming Rules:

S - SMA Female

Direction Naming Rules:

1 - Clockwise
2 - Anticlockwise

How To Order

NCI1622B-U-V-W-X-Y-Z

U: Start frequency in MHz
V: Stop frequency in MHz
W: Forward power in W
X: Reverse power in W
Y: Connector type
Z: Direction type

Examples:
To order a NCI1622B series Isolator, 8~18GHz, Forward power 30W, Reverse power 10W, SMA female, Clockwise, specify NCI1622B-8000-18000-30-10-S-1.

Customization is available upon request.

NCI1626B

High Power, High Isolation

Features:
* High Power
* High Isolation
* Low Insertion Loss
* Low VSWR

Applications:
* Wireless
* Radar
* Laboratory Test

Description

NCI1626B series Coaxial Isolators cover frequency range 3700~5000MHz. High power, high isolation and low insertion loss make it ideal for a lot of applications like amplifiers, transceivers, etc.

Specifications

Frequency (MHz)	Bandwidth (MHz)	IL (dB Max.)	Isolation (dB Min.)	VSWR (Max.)	Fwd Power (W Max.)	Rev Power (W)	Connector	Temperature (°C)
3700~4200	500	0.40	20.0	1.25	60	10	SMA	-10~+60
4000~5000	1000	0.40	20.0	1.25	60	10	SMA	-10~+60

Outline Drawings

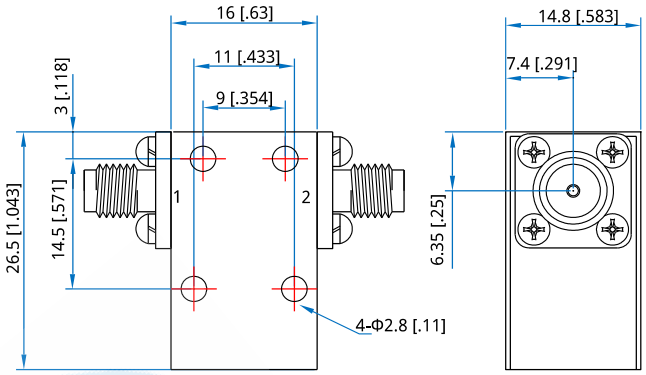

Unit: mm [inch] Tolerance: ±0.2mm [±0.008in]

Mechanical

Size*1: 16*26.5*14.8mm
0.63*1.043*0.583in
Mounting: 4-Φ2.8mm through-hole

[1] Exclude connectors and terminations.

Connector Naming Rules:

S - SMA Female

Direction Naming Rules:

1 - Clockwise
2 - Anticlockwise

How To Order

NCI1626B-U-V-W-X-Y-Z

U: Start frequency in MHz
V: Stop frequency in MHz
W: Forward power in W
X: Reverse power in W
Y: Connector type
Z: Direction type

Examples:
To order a NCI1626B series Isolator, 3700~4200MHz, Forward power 60W, Reverse power 10W, SMA female, Clockwise, specify NCI1626B-3700-4200-60-10-S-1.

Customization is available upon request.

Coaxial Isolator

NCI-18000-26500-10-5-K-1

18~26.5GHz, 10W/5W, 2.92mm Female, Clockwise

Features:
* Broadband
* High Power
* Low Insertion Loss

Applications:
* Wireless
* Radar
* Laboratory Test

Electrical

Frequency:	18~26.5GHz
Insertion Loss:	0.7dB max.
Isolation:	16dB min.
VSWR:	1.4 max.
Forward Power:	10W
Reverse Power:	5W

Mechanical

Size[*1]:	12*20*13mm 0.472*0.787*0.512in
RF Connectors:	2.92mm Female
Mounting:	2-Φ2.2mm through-hole
Direction:	Clockwise

[1] Exclude connectors and termination.

Environmental

Operating Temperature:	-30~+70℃

Outline Drawings

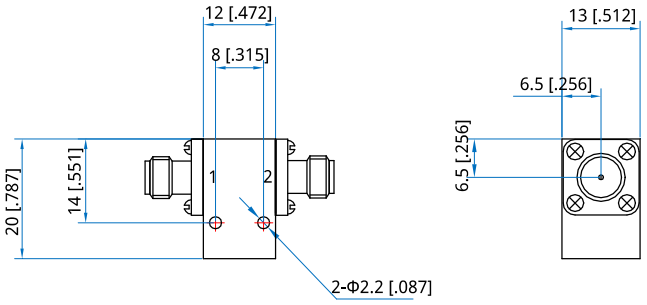

Unit: mm [in]
Tolerance: ±0.2mm [±0.008in]

How To Order

NCI-18000-26500-10-5-K-1

Customization is available upon request.

Coaxial Isolator

NCI-18000-26500-10-5-K-1

18~26.5GHz, 10W/5W, 2.92mm Female, Clockwise

Features:
* Broadband
* High Power
* Low Insertion Loss

Applications:
* Wireless
* Radar
* Laboratory Test

Electrical

Frequency:	18~26.5GHz
Insertion Loss:	0.7dB max.
Isolation:	16dB min.
VSWR:	1.4 max.
Forward Power:	10W
Reverse Power:	5W

Mechanical

Size[*1]:	12*20*13mm 0.472*0.787*0.512in
RF Connectors:	2.92mm Female
Mounting:	2-Φ2.2mm through-hole
Direction:	Clockwise

[1] Exclude connectors and termination.

Environmental

Operating Temperature:	-30~+70℃

Outline Drawings

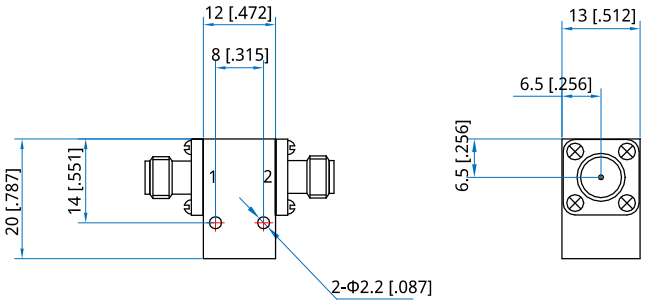

Unit: mm [in]
Tolerance: ±0.2mm [±0.008in]

How To Order

NCI-18000-26500-10-5-K-1

Customization is available upon request.

Coaxial Isolator

NCI-2000-4000-K5-K2-N-1

2~4GHz, 500W, 200W, N Female, Clockwise

Features:
* Broadband
* High Power
* Low Insertion Loss

Applications:
* Wireless
* Radar
* Laboratory Test

Electrical

Frequency:	2~4GHz
VSWR:	1.5 max.
Insertion Loss:	0.6dB max.
Isolation:	15dB min.
Forward Power:	500W
Reverse Power:	200W

Mechanical

Size[*1]:	59.4*125*40mm 2.339*4.921*1.575in
RF Connectors:	N Female
Mounting:	4-Φ4.2mm through-hole
Cooling:	Forced air
Direction:	Clockwise

[1] Exclude connectors and terminations.

Environmental

Operating Temperature:	-20~+60°C
Non-operating Temperature:	-55~+85°C

Outline Drawings

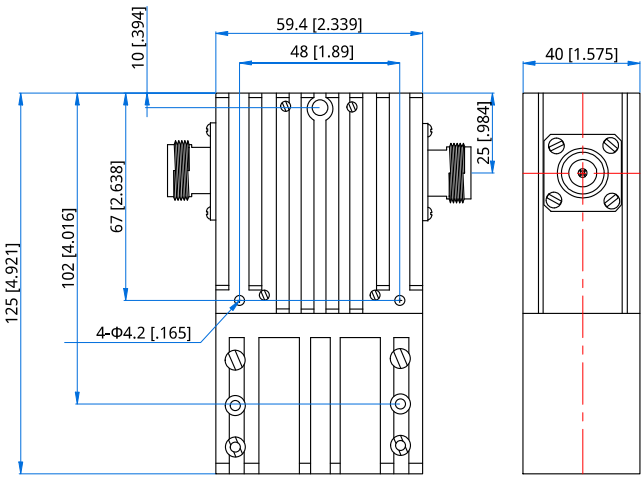

Unit: mm [in]
Tolerance: ±0.2mm [±0.008in]

How To Order

NCI-2000-4000-K5-K2-N-1

Customization is available upon request.

NCI2025X

High Power, High Isolation

Features:
* High Power
* High Isolation
* Low Insertion Loss
* Low VSWR

Applications:
* Wireless
* Radar
* Laboratory Test

Description

NCI2025X series Coaxial Isolators cover frequency range 1300~4000MHz. High power, high isolation and low insertion loss make it ideal for a lot of applications like amplifiers, transceivers, etc.

Specifications

Frequency (MHz)	Bandwidth (MHz)	IL (dB Max.)	Isolation (dB Min.)	VSWR (Max.)	Fwd Power (W Max.)	Rev Power (W)	Connector	Temperature (°C)
1300~4000	100	0.30	23.0	1.20	100	20	SMA	-30~+70
1700~1900	200	0.40	20.0	1.25	100	20	SMA	-30~+70
1900~2200	300	0.40	20.0	1.25	100	20	SMA	-30~+70
2400~2500	100	0.25	25.0	1.15	100	20	SMA	-30~+70
2500~2700	200	0.30	23.0	1.20	100	20	SMA	-30~+70
2700~3100	400	0.30	20.0	1.25	100	20	SMA	-30~+70
3100~3400	300	0.30	20.0	1.20	100	20	SMA	-30~+70
3400~3600	200	0.30	20.0	1.20	100	20	SMA	-30~+70
3600~4000	400	0.30	20.0	1.25	100	20	SMA	-30~+70

Outline Drawings

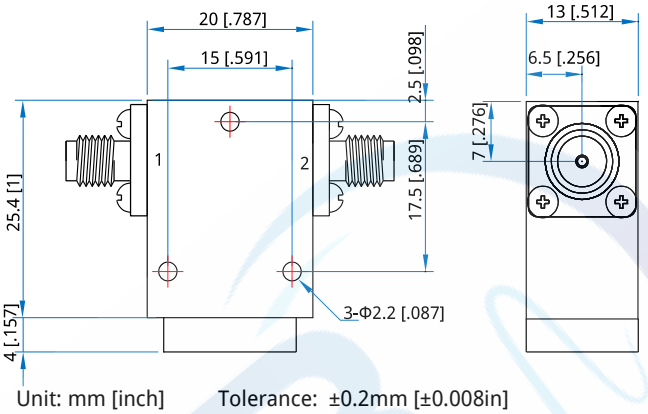

Unit: mm [inch] Tolerance: ±0.2mm [±0.008in]

Mechanical

Size*1: 20*25.4*13mm
0.787*1*0.512in
Mounting: 3-Φ2.2mm through-hole

[1] Exclude connectors and terminations.

Connector Naming Rules:

S - SMA Female

Direction Naming Rules:

1 - Clockwise
2 - Anticlockwise

How To Order

NCI2025X-U-V-W-X-Y-Z

U: Start frequency in MHz
V: Stop frequency in MHz
W: Forward power in W
X: Reverse power in W
Y: Connector type
Z: Direction type

Examples:
To order a NCI2025X series Isolator, 1500~1700MHz, Forward power 100W, Reverse power 20W, SMA female, Clockwise, specify NCI2025X-1500-1700-K1-20-S-1.

Customization is available upon request.

NCI2123B

High Power, High Isolation

Features:
* High Power
* High Isolation
* Low Insertion Loss
* Low VSWR

Applications:
* Wireless
* Radar
* Laboratory Test

Description

NCI2123B series Coaxial Isolators cover frequency range 4000~8000MHz. High power, high isolation and low insertion loss make it ideal for a lot of applications like amplifiers, transceivers, etc.

Specifications

Frequency (MHz)	Bandwidth (MHz)	IL (dB Max.)	Isolation (dB Min.)	VSWR (Max.)	Fwd Power (W Max.)	Rev Power (W)	Connector	Temperature (°C)
4000~8000	4000	0.60	18.0	1.35	60	20	SMA	0~+60
5800~6800	1000	0.50	19.0	1.30	60	20	SMA	0~+60
6000~8000	2000	0.40	18.0	1.30	60	20	SMA	0~+60

Outline Drawings

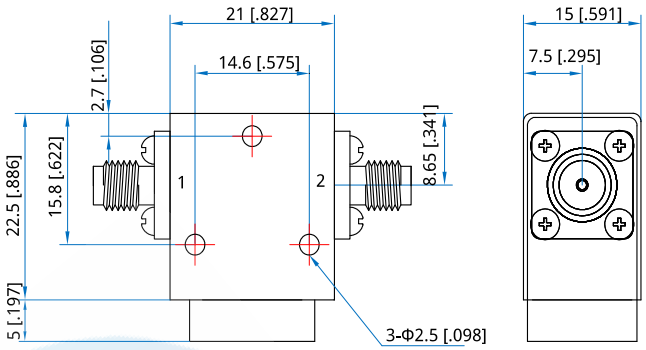

Unit: mm [inch] Tolerance: ±0.2mm [±0.008in]

Mechanical

Size[*1]: 21*22.5*15mm
0.827*0.886*0.591in
Mounting: 3-Φ2.5mm through-hole

[1] Exclude connectors and terminations.

Connector Naming Rules:

S - SMA Female

Direction Naming Rules:

1 - Clockwise
2 - Anticlockwise

How To Order

NCI2123B-U-V-W-X-Y-Z

U: Start frequency in MHz
V: Stop frequency in MHz
W: Forward power in W
X: Reverse power in W
Y: Connector type
Z: Direction type

Examples:
To order a NCI2123B series Isolator, 4000~8000MHz, Forward power 60W, Reverse power 20W, SMA female, Clockwise, specify NCI2123B-4000-8000-60-20-S-1.

Customization is available upon request.

Triple Junction Coaxial Isolators

NCI23085H

High Power, High Isolation

Features:
* High Power
* High Isolation
* Low Insertion Loss
* Low VSWR

Applications:
* Wireless
* Radar
* Laboratory Test

Description

NCI23085H series Coaxial Isolators cover frequency range 70~230MHz. High power, high isolation and low insertion loss make it ideal for a lot of applications like amplifiers, transceivers, etc.

Specifications

Frequency (MHz)	Bandwidth (MHz)	IL (dB Max.)	Isolation (dB Min.)	VSWR (Max.)	Fwd Power*1 (W Max.)	Rev Power (W)	Connector	Temperature (°C)
87~108	21	1.80	60.0	1.25	150	100	SMA, N	-30~+75
116~138	22	1.80	60.0	1.25	150	100	SMA, N	-30~+75
130~180	50	1.80	60.0	1.25	150	100	SMA, N	-30~+75
136~154	18	1.80	70.0	1.25	150	100	SMA, N	-30~+75
154~176	22	1.80	70.0	1.25	150	100	SMA, N	-30~+75
136~174	38	1.80	60.0	1.25	150	100	SMA, N	-30~+75
150~200	50	1.80	60.0	1.25	150	100	SMA, N	-30~+75
170~230	60	1.80	60.0	1.25	150	100	SMA, N	-30~+75

[1] The connector is SMA, and the maximum forward power can only reach 100W.

Outline Drawings

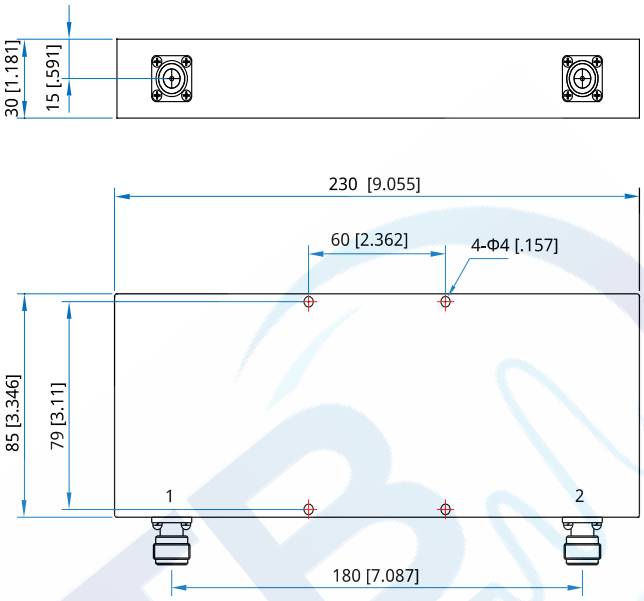

Unit: mm [inch] Tolerance: ±0.2mm [±0.008in]

Mechanical

Size*2:	230*85*30mm
	9.055*3.346*1.181in
Mounting:	4-Φ4mm through-hole

[2] Exclude connectors and terminations.

Connector Naming Rules:

N - N Female
S - SMA Female

Direction Naming Rules:

1 - Clockwise
2 - Anticlockwise

How To Order

NCI23085H-U-V-W-X-Y-Z

U: Start frequency in MHz
V: Stop frequency in MHz
W: Forward power in W
X: Reverse power in W
Y: Connector type
Z: Direction type

Examples:
To order a NCI23085Hseries Isolator, 87~108MHz, Forward power 150W, Reverse power 100W, N female, Clockwise, specify NCI23085H-87-108-K15-K1-N-1.

Customization is available upon request.

Coaxial Isolator

NCI-2400-2500-K75-K2-N-1

2.4~2.5GHz, 750W, 200W, N Female, Clockwise

Features:
* Broadband
* High Power
* Low Insertion Loss

Applications:
* Wireless
* Radar
* Laboratory Test

Electrical

Frequency:	2.4~2.5GHz
Insertion Loss:	0.35dB max.
Isolation:	20dB min.
VSWR:	1.2 max.
Forward Power:	750W
Reverse Power:	200W

Mechanical

Size[*1]:	72*62*22mm
	2.835*2.441*0.866in
Connectors:	N Female
Direction:	Clockwise

[1] Exclude connectors and terminations.

Environmental

Temperature:	-30~+70°C

Outline Drawings

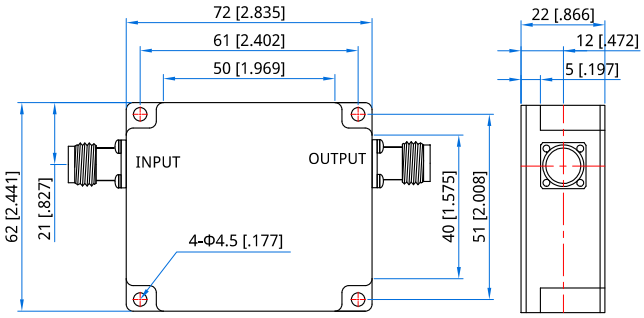

Unit: mm [in]
Tolerance: ±0.2mm [±0.008in]

How To Order

NCI-2400-2500-K75-K2-N-1

Customization is available upon request.

NCI2528B

High Power, High Isolation

Features:
* High Power
* High Isolation
* Low Insertion Loss
* Low VSWR

Applications:
* Wireless
* Radar
* Laboratory Test

Description

NCI2528B series Coaxial Isolators cover frequency range 900~4000MHz. High power, high isolation and low insertion loss make it ideal for a lot of applications like amplifiers, transceivers, etc.

Specifications

Frequency (MHz)	Bandwidth (MHz)	IL (dB Max.)	Isolation (dB Min.)	VSWR (Max.)	Fwd Power*1 (W Max.)	Rev Power (W)	Connector	Temperature (°C)
800~1300	70	0.30	23.0	1.20	200	10~100	SMA, N	-30~+70
820~880	60	0.30	23.0	1.20	200	10~100	SMA, N	-30~+70
920~960	40	0.30	23.0	1.20	200	10~100	SMA, N	-30~+70
1200~1400	200	0.30	23.0	1.20	200	10~100	SMA, N	-30~+70
1300~4000	100	0.30	23.0	1.20	200	10~100	SMA, N	-30~+70
1700~1900	200	0.40	20.0	1.25	200	10~100	SMA, N	-30~+70
1900~2200	300	0.40	20.0	1.25	200	10~100	SMA, N	-30~+70
2200~2500	300	0.35	20.0	1.20	200	10~100	SMA, N	-30~+70
2500~2700	200	0.30	23.0	1.20	200	10~100	SMA, N	-30~+70
2700~3100	400	0.30	20.0	1.25	200	10~100	SMA, N	-30~+70
3100~3400	300	0.30	20.0	1.20	200	10~100	SMA, N	-30~+70
3400~3600	200	0.30	20.0	1.20	200	10~100	SMA, N	-30~+70
3600~4000	400	0.30	20.0	1.25	200	10~100	SMA, N	-30~+70

The size of the termination varies according to the reverse power

[1] The connector is SMA, and the maximum forward power can only reach 100W.

Outline Drawings

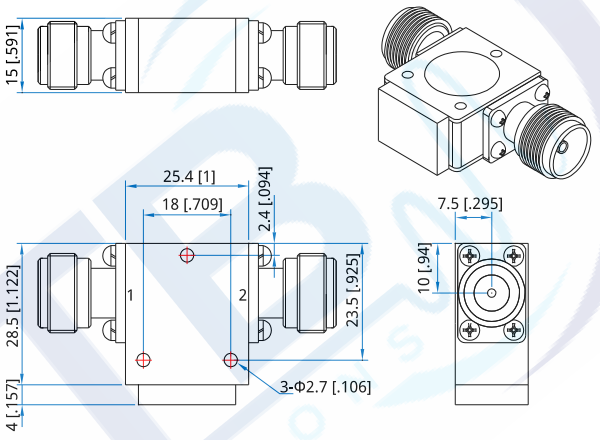

Outline A

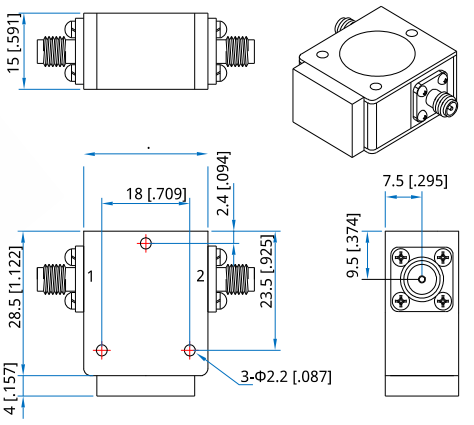

Outline B

Unit: mm [inch] Tolerance: ±0.2mm [±0.008in]

Mechanical

Size*2:	25.4*28.5*15mm
	1*1.122*0.591in
Mounting:	3-Φ2.7mm through-hole (N)
	3-Φ2.2mm through-hole (SMA)

[2] Exclude connectors and terminations.

Connector Naming Rules:

N - N Female (Outline A)

S - SMA Female (Outline B)

Direction Naming Rules:

1 - Clockwise

2 - Anticlockwise

How To Order

NCI2528B-U-V-W-X-Y-Z

U: Start frequency in MHz

V: Stop frequency in MHz

W: Forward power in W

X: Reverse power in W

Y: Connector type

Z: Direction type

Examples:

To order a NCI2528B series Isolator, 820~880MHz, Forward power 200W, Reverse power 100W, N female, Clockwise, specify NCI2528B-820-860-K2-K1-N-1.

Customization is available upon request.

NCI2528C

High Power, High Isolation

Features:
* High Power
* High Isolation
* Low Insertion Loss
* Low VSWR

Applications:
* Wireless
* Radar
* Laboratory Test

Description

NCI2528C series Coaxial Isolators cover frequency range 2500~5900MHz. High power, high isolation and low insertion loss make it ideal for a lot of applications like amplifiers, transceivers, etc.

Specifications

Frequency (MHz)	Bandwidth (MHz)	IL (dB Max.)	Isolation (dB Min.)	VSWR (Max.)	Fwd Power (W Max.)	Rev Power (W)	Connector	Temperature (℃)
2500~6000	3500	0.90	17	1.35	100	20	N	0~+60
2700~4500	1800	0.65	18	1.30	100	20	N	0~+60
2700~6200	3500	0.80	16	1.40	100, 60	20	SMA, N	0~+60
3000~3600	600	0.60	19	1.25	100	20	N	-30~+70
3000~4200	1200	0.60	18	1.30	100	20	N	-30~+70
3000~4800	1800	0.60	18	1.30	100	20	N	-30~+70
3000~5000	2000	0.60	18	1.25	100	20	N	-30~+70
3000~6000	3000	0.60	18	1.30	100, 60	100, 20	SMA,N	-30~+70
3200~6000	2800	0.60	18	1.30	100	20	N	-30~+70
3300~3800	500	0.50	20	1.25	100	20	N	-30~+70
3300~5000	1700	0.60	18	1.30	100	20	N	-30~+70
3400~3600	200	0.50	20	1.20	100	20	N	-30~+70
3400~4200	800	0.55	20	1.25	100	20	N	-30~+70
3700~4200	500	0.50	20	1.20	100	20	N	-30~+70
4000~5000	1000	0.60	20	1.25	100	20	N	-30~+70
4000~6000	2000	0.60	20	1.25	100	20	N	-30~+70
4400~5000	600	0.60	20	1.25	100	20	N	-30~+70
4400~5250	850	0.60	20	1.20	100	20	N	-30~+70
4400~5900	1500	0.60	20	1.25	100	20	N	-30~+70
4500~5250	750	0.60	20	1.25	100	20	N	-30~+70
4900~5800	900	0.60	20	1.25	100	20	N	-30~+70
5000~6000	1000	0.60	18	1.30	100	20	N	-30~+70
5000~6500	1500	0.60	18	1.30	100	20	N	-30~+70
5300~5900	600	0.60	20	1.20	100	20	N	-30~+70
5300~6300	1000	0.60	18	1.30	100	20	N	-30~+70
5400~5800	400	0.60	20	1.25	100	20	N	-30~+70

Coaxial Isolators

Frequency (MHz)	Bandwidth (MHz)	IL (dB Max.)	Isolation (dB Min.)	VSWR (Max.)	Fwd Power (W Max.)	Rev Power (W)	Connector	Temperature (℃)
5400~6200	800	0.60	18	1.30	100	20	N	0~+60
5500~6000	500	0.60	20	1.25	100	20	N	0~+60
5700~5880	180	0.60	23	1.20	100	20	N	-30~+70
5700~5900	200	0.60	23	1.25	100	20	N	-30~+70

Outline Drawings

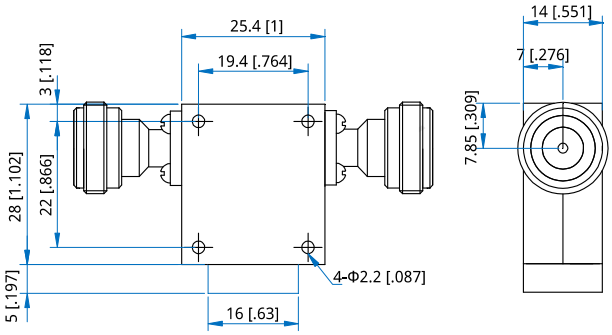

Outline A

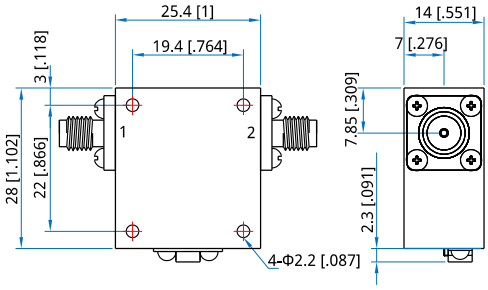

Outline B

Unit: mm [inch] Tolerance: ±0.2mm [±0.008in]

Mechanical

Size[*1]: 25.4*28*14mm
1*1.102*0.551in
Mounting: 4-Φ2.2mm through-hole

[1] Exclude connectors and terminations.

Connector Naming Rules:

S - SMA Female (Outline B)
N - N Female (OUtline A)

Direction Naming Rules:

1 - Clockwise
2 - Anticlockwise

How To Order

NCI2528C-U-V-W-X-Y-Z

U: Start frequency in MHz
V: Stop frequency in MHz
W: Forward power in W
X: Reverse power in W
Y: Connector type
Z: Direction type

Examples:
To order a NCI2528C series Isolator, 3000~6000MHz, Forward power 60W, Reverse power 20W, SMA female, Clockwise, specify NCI2528C-3000-6000-60-20-S-1.

Customization is available upon request.

NCI2528X

High Power, High Isolation

Features:
* High Power
* High Isolation
* Low Insertion Loss
* Low VSWR

Applications:
* Wireless
* Radar
* Laboratory Test

Description

NCI2528X series Coaxial Isolators cover frequency range 2900~3500MHz. High power, high isolation and low insertion loss make it ideal for a lot of applications like amplifiers, transceivers, etc.

Specifications

Frequency (MHz)	Bandwidth (MHz)	IL (dB Max.)	Isolation (dB Min.)	VSWR (Max.)	Fwd Power (W Max.)	Rev Power (W)	Connector	Temperature (℃)
2900~3500	600	0.60	17	1.35	100	20	SMA	-30~+70

Outline Drawings

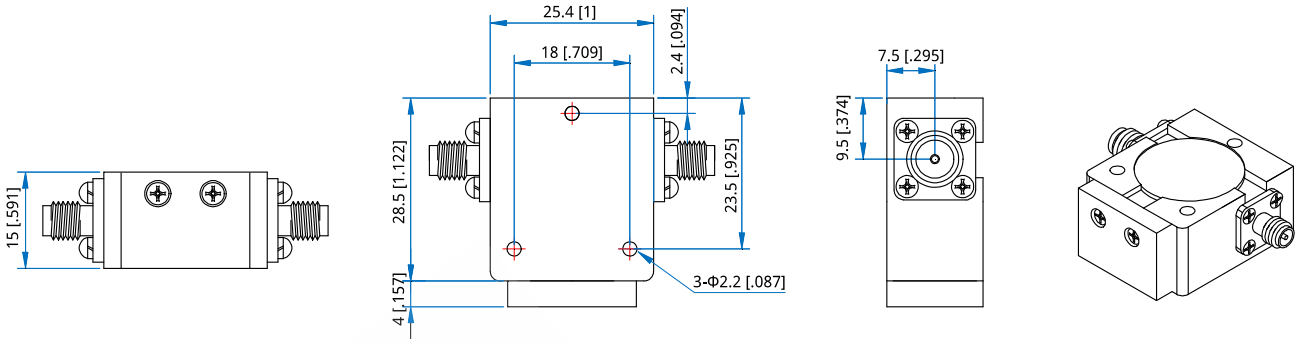

Outline A

Unit: mm [inch] Tolerance: ±0.2mm [±0.008in]

Mechanical

Size*1: 25.4*28.5*15mm
1*1.122*0.591in
Mounting: 3-Φ2.2mm through-hole

[1] Exclude connectors and terminations.

Connector Naming Rules:

S - SMA Female (Outline A)

Direction Naming Rules:

1 - Clockwise
2 - Anticlockwise

How To Order

NCI2528X-U-V-W-X-Y-Z

U: Start frequency in MHz
V: Stop frequency in MHz
W: Forward power in W
X: Reverse power in W
Y: Connector type
Z: Direction type

Examples:
To order a NCI2528X series Isolator, 2900~3500MHz, Forward power 100W, Reverse power 20W, SMA female, Clockwise, specify NCI2528X-2900-3500-K1-20-S-1.

Customization is available upon request.

NCI2619C

High Power, High Isolation

Features:
* High Power
* High Isolation
* Low Insertion Loss
* Low VSWR

Applications:
* Wireless
* Radar
* Laboratory Test

Description

NCI2619C series Coaxial Isolators cover frequency range 8~12GHz. High power, high isolation and low insertion loss make it ideal for a lot of applications like amplifiers, transceivers, etc.

Specifications

Frequency (MHz)	Bandwidth (MHz)	IL (dB Max.)	Isolation (dB Min.)	VSWR (Max.)	Fwd Power (W Max.)	Rev Power (W)	Connector	Temperature (°C)
8000~12000	4000	0.80	35.0	1.30	30	10	SMA	-10~+60

Outline Drawings

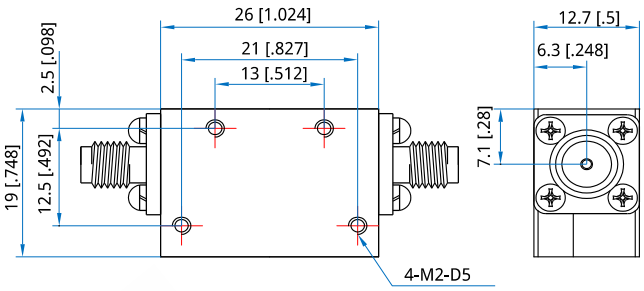

Unit: mm [inch] Tolerance: ±0.2mm [±0.008in]

Mechanical

Size[*1]: 26*19*12.7mm
1.024*0.748*0.5in
Mounting: 4-M2, depth 5mm

[1] Exclude connectors and terminations.

Connector Naming Rules:

S - SMA Female

Direction Naming Rules:

1 - Clockwise
2 - Anticlockwise

How To Order

NCI2619C-U-V-W-X-Y-Z

U: Start frequency in MHz
V: Stop frequency in MHz
W: Forward power in W
X: Reverse power in W
Y: Connector type
Z: Direction type

Examples:
To order a NCI2619C series Isolator, 8~12GHz, Forward power 30W, Reverse power 10W, SMA female, Clockwise, specify NCI2619C-8000-12000-30-10-S-1.

Customization is available upon request.

Coaxial Isolator

NCI-26500-40000-10-1-K

26.5~40GHz

Features:
* Broadband
* High Power
* Low Insertion Loss

Applications:
* Wireless
* Radar
* Laboratory Test

Electrical

Frequency:	26.5~40GHz
Insertion Loss:	1.7dB max.
Isolation:	12dB min.
VSWR:	1.8 max.
Forward Power:	10W max.
Reverse Power:	1W max.
Impedance:	50Ω

Mechanical

Size*1:	13*26*22mm
	0.512*1.024*0.866in
RF Connectors:	2.92mm female
Mounting:	3-M2.5mm
	tapped-through-hole

[1] Exclude connectors and termination.

Environmental

Operating Temperature:	-45~+85°C
Non-operating Temperature:	-55~+105°C

Outline Drawings

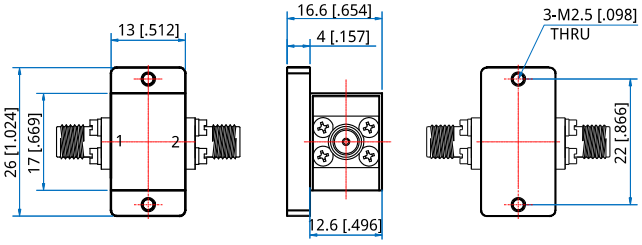

Unit: mm [in]
Tolerance: ±0.25mm [±0.01in]

How To Order

NCI-26500-40000-10-1-K

Customization is available upon request.

Coaxial Isolator

NCI-26500-40000-5-1-K-1

26.5~40GHz, 5W/1W, 2.92mm Female, Clockwise

Features:
* Broadband
* High Power
* Low Insertion Loss

Applications:
* Wireless
* Radar
* Laboratory Test

Electrical

Frequency:	26.5~40GHz
Insertion Loss:	1.3dB max.
Isolation:	12dB min.
VSWR:	1.7 max.
Forward Power:	5W
Reverse Power:	1W
Impedance:	50Ω

Mechanical

Size*1:	26*13*16.8mm
	1.024*0.512*0.661in
RF Connectors:	2.92mm female
Mounting:	2-M2.5 through-hole
Direction:	Clockwise

[1] Exclude connectors and termination.

Environmental

Operating Temperature:	-30~+70°C

Outline Drawings

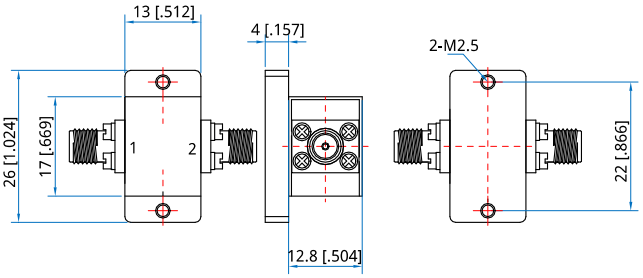

Unit: mm [in]
Tolerance: ±0.25mm [±0.01in]

How To Order

NCI-26500-40000-5-1-K-1

Customization is available upon request.

Coaxial Isolator

NCI-26500-40000-5-1-K-1

26.5~40GHz, 5W/1W, 2.92mm Female, Clockwise

Features:
* Broadband
* High Power
* Low Insertion Loss

Applications:
* Wireless
* Radar
* Laboratory Test

Electrical

Frequency:	26.5~40GHz
Insertion Loss:	1.3dB max.
Isolation:	12dB min.
VSWR:	1.7 max.
Forward Power:	5W
Reverse Power:	1W
Impedance:	50Ω

Mechanical

Size*1:	26*13*16.8mm
	1.024*0.512*0.661in
RF Connectors:	2.92mm female
Mounting:	2-M2.5 through-hole
Direction:	Clockwise

[1] Exclude connectors and termination.

Environmental

Operating Temperature:	-30~+70°C

Outline Drawings

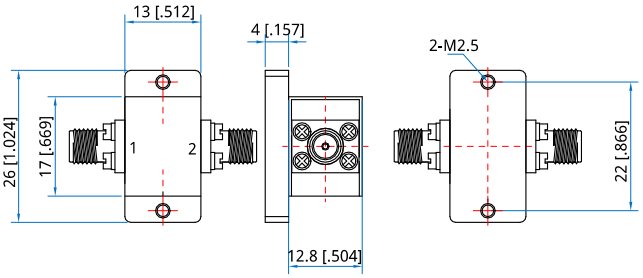

Unit: mm [in]
Tolerance: ±0.25mm [±0.01in]

How To Order

NCI-26500-40000-5-1-K-1

Customization is available upon request.

NCI3030B

High Power, High Isolation

Features:
* High Power
* High Isolation
* Low Insertion Loss
* Low VSWR

Applications:
* Wireless
* Radar
* Laboratory Test

Description

NCI3030B series Coaxial Isolators cover frequency range 2~6GHz. High power, high isolation and low insertion loss make it ideal for a lot of applications like amplifiers, transceivers, etc.

Specifications

Frequency (MHz)	Bandwidth (MHz)	IL (dB Max.)	Isolation (dB Min.)	VSWR (Max.)	Fwd Power (W Max.)	Rev Power (W)	Connector	Temperature (°C)
2000~6000	4000	1.70	12.0	1.60	20	20	SMA	-40~+70

Outline Drawings

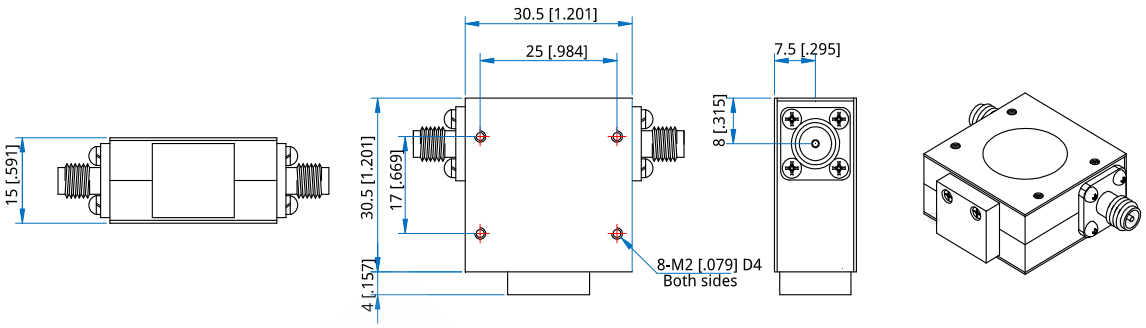

Unit: mm [inch] Tolerance: ±0.2mm [±0.008in]

Mechanical

Size*1:	30.5*30.5*15mm
	1.201*1.201*0.591in
Mounting:	8-M2 Deep 4

[1] Exclude connectors and terminations.

Connector Naming Rules:

S - SMA Female

Direction Naming Rules:

1 - Clockwise
2 - Anticlockwise

How To Order

NCI3030B-U-V-W-X-Y-Z

U: Start frequency in MHz
V: Stop frequency in MHz
W: Forward power in W
X: Reverse power in W
Y: Connector type
Z: Direction type

Examples:
To order a NCI3030B series Isolator, 2~6GHz, Forward power 20W, Reverse power 20W, SMA female, Clockwise, specify NCI3030B-2000-6000-20-20-S-1.

Customization is available upon request.

NCI3033X

High Power, High Isolation

Features:
* High Power
* High Isolation
* Low Insertion Loss
* Low VSWR

Applications:
* Wireless
* Radar
* Laboratory Test

Description

NCI3033X series Coaxial Isolators cover frequency range 700~3000MHz. High power, high isolation and low insertion loss make it ideal for a lot of applications like amplifiers, transceivers, etc.

Specifications

Frequency (MHz)	Bandwidth (MHz)	IL (dB Max.)	Isolation (dB Min.)	VSWR (Max.)	Fwd Power*1 (W Max.)	Rev Power (W)	Connector	Temperature (°C)
700~1300	100	0.30	23.0	1.20	100	10~100	SMA	-30~+70
700~1300	200	0.40	20.0	1.25	100	10~100	SMA	-30~+70
700~900	200	0.40	20.0	1.25	100	10~100	SMA	-30~+70
800~1000	200	0.40	20.0	1.25	100	10~100	SMA	-30~+70
890~960	70	0.25	25.0	1.15	100	10~100	SMA	-30~+70
950~1450	500	0.60	15.0	1.45	100	10~100	SMA	-30~+70
960~1215	255	0.30	21.0	1.20	100	10~100	SMA	-30~+70
960~1260	300	0.45	20.0	1.25	100	10~100	SMA	-30~+70
1030~1090	60	0.25	25.0	1.15	100	10~100	SMA	-30~+70
1290~1310	20	0.25	25.0	1.15	100	10~100	SMA	-30~+70
1300~3000	200	0.30	23.0	1.20	100	10~100	SMA	-30~+70
1300~3000	300	0.45	18.0	1.30	100	10~100	SMA	-30~+70
1350~1850	500	0.60	15.0	1.45	100	10~100	SMA	-30~+70
1400~1700	300	0.45	20.0	1.25	100	10~100	SMA	-30~+70
1700~2300	600	0.50	20.0	1.25	100	10~100	SMA	-30~+70
1900~2200	300	0.40	20.0	1.25	100	10~100	SMA	-30~+70
2100~2700	600	0.50	18.0	1.35	100	10~100	SMA	-30~+70
2200~2400	200	0.30	23.0	1.20	100	10~100	SMA	-30~+70
2300~2700	400	0.40	20.0	1.25	100	10~100	SMA	-30~+70
2500~2700	200	0.30	23.0	1.20	100	10~100	SMA	-30~+70
2700~2900	200	0.30	23.0	1.20	100	10~100	SMA	-30~+70
2800~3000	200	0.30	23.0	1.20	100	10~100	SMA	-30~+70

The size of the termination varies according to the reverse power

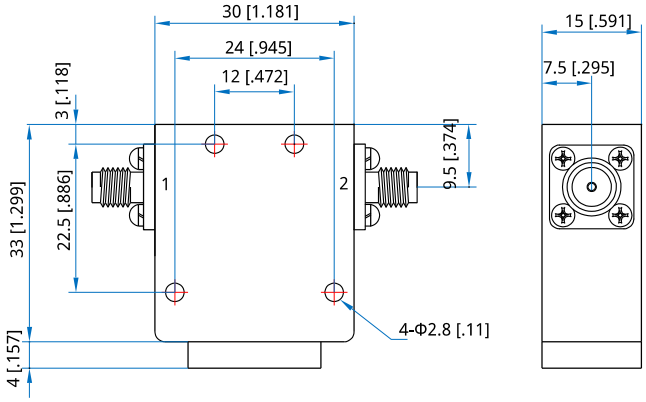

Unit: mm [inch] Tolerance: ±0.2mm [±0.008in]

Mechanical

Size*2:	30*33*15mm
	1.181*1.299*0.591in
Mounting:	4-Φ2.8mm through-hole

[2] Exclude connectors and terminations.

Connector Naming Rules:

S - SMA Female

Direction Naming Rules:

1 - Clockwise
2 - Anticlockwise

How To Order

NCI3033X-U-V-W-X-Y-Z

U: Start frequency in MHz
V: Stop frequency in MHz
W: Forward power in W
X: Reverse power in W
Y: Connector type
Z: Direction type

Examples:
To order a NCI3033X series Isolator, 1400~1600MHz, Forward power 100W, Reverse power 100W, SMA female, Clockwise, specify NCI3033X-1400-1600-K1-K1-S-1.

Customization is available upon request.

NCI3232X

High Power, High Isolation

Features:
* High Power
* High Isolation
* Low Insertion Loss
* Low VSWR

Applications:
* Wireless
* Radar
* Laboratory Test

Description

NCI3232X series Coaxial Isolators cover frequency range 700~3000MHz. High power, high isolation and low insertion loss make it ideal for a lot of applications like amplifiers, transceivers, etc.

Specifications

Frequency (MHz)	Bandwidth (MHz)	IL (dB Max.)	Isolation (dB Min.)	VSWR (Max.)	Fwd Power*1 (W Max.)	Rev Power (W)	Connector	Temperature (°C)
700~1300	100	0.30	23.0	1.20	200	10~100	SMA	-30~+70
700~1300	200	0.40	20.0	1.25	200	10~100	SMA	-30~+70
700~900	200	0.40	20.0	1.25	200	10~100	SMA	-30~+70
800~1000	200	0.40	20.0	1.25	200	10~100	SMA	-30~+70
890~960	70	0.25	25.0	1.15	200	10~100	SMA	-30~+70
950~1450	500	0.60	15.0	1.45	200	10~100	SMA	-30~+70
960~1215	255	0.30	21.0	1.20	200	10~100	SMA	-30~+70
960~1260	300	0.45	20.0	1.25	200	10~100	SMA	-30~+70
1030~1090	60	0.25	25.0	1.15	200	10~100	SMA	-30~+70
1290~1310	20	0.25	25.0	1.15	200	10~100	SMA	-30~+70
1300~3000	200	0.30	23.0	1.20	200	10~100	SMA	-30~+70
1300~3000	300	0.45	18.0	1.30	200	10~100	SMA	-30~+70
1350~1850	500	0.60	15.0	1.45	200	10~100	SMA	-30~+70
1400~1700	300	0.45	20.0	1.25	200	10~100	SMA	-30~+70
1700~2300	600	0.50	20.0	1.25	200	10~100	SMA	-30~+70
1900~2200	300	0.40	20.0	1.25	200	10~100	SMA	-30~+70
2100~2700	600	0.50	18.0	1.35	200	10~100	SMA	-30~+70
2200~2400	200	0.30	23.0	1.20	200	10~100	SMA	-30~+70
2300~2700	400	0.40	20.0	1.25	200	10~100	SMA	-30~+70
2500~2700	200	0.30	23.0	1.20	200	10~100	SMA	-30~+70
2700~2900	200	0.30	23.0	1.20	200	10~100	SMA	-30~+70
2800~3000	200	0.30	23.0	1.20	200	10~100	SMA	-30~+70

The size of the termination varies according to the reverse power

[1] The connector is SMA, and the maximum forward power can only reach 100W.

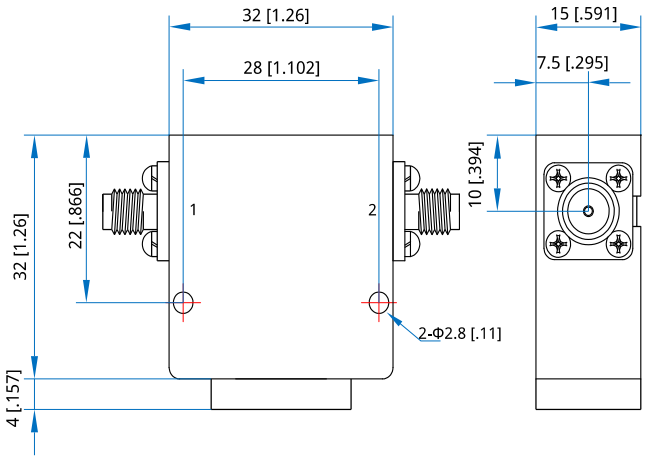

Unit: mm [inch] Tolerance: ±0.2mm [±0.008in]

Mechanical

Size*2:	32*32*15mm
	1.26*1.26*0.591in
Mounting:	4-Φ2.8mm through-hole

[2] Exclude connectors and terminations.

Connector Naming Rules:

S - SMA Female

Direction Naming Rules:

1 - Clockwise

2 - Anticlockwise

How To Order

NCI3232X-U-V-W-X-Y-Z

U: Start frequency in MHz

V: Stop frequency in MHz

W: Forward power in W

X: Reverse power in W

Y: Connector type

Z: Direction type

Examples:

To order a NCI3232X series Isolator, 700~806MHz, Forward power 200W, Reverse power 100W, SMA female, Clockwise, specify NCI3232X-700-806-K2-K1-S-1.

Customization is available upon request.

NCI3234A

High Power, High Isolation

Features:
* High Power
* High Isolation
* Low Insertion Loss
* Low VSWR

Applications:
* Wireless
* Radar
* Laboratory Test

Description

NCI3234A series Coaxial Isolators cover frequency range 2000~4000MHz. High power, high isolation and low insertion loss make it ideal for a lot of applications like amplifiers, transceivers, etc.

Specifications

Frequency (MHz)	Bandwidth (MHz)	IL (dB Max.)	Isolation (dB Min.)	VSWR (Max.)	Fwd Power (W Max.)	Rev Power (W)	Connector	Temperature (°C)
2000~3000	1000	0.60	18.0	1.30	100	20	SMA, N	0~+60
2000~4000	2000	0.60	18.0	1.30	100	20	SMA, N	0~+60

Outline Drawings

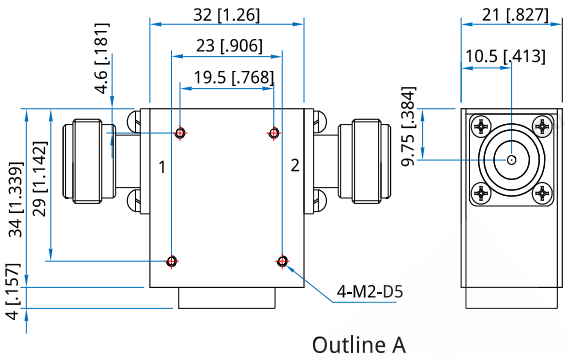

Outline A

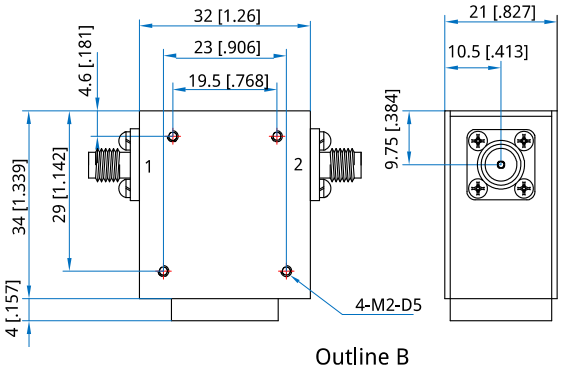

Outline B

Unit: mm [inch] Tolerance: ±0.2mm [±0.008in]

Mechanical

Size*1: 32*34*21mm
1.26*1.339*0.827in
Mounting: 4-M2, depth 5mm

[1] Exclude connectors and terminations.

Connector Naming Rules:

N - N Female (Outline A)
S - SMA Female (Outline B)

Direction Naming Rules:

1 - Clockwise
2 - Anticlockwise

How To Order

NCI3234A-U-V-W-X-Y-Z

U: Start frequency in MHz
V: Stop frequency in MHz
W: Forward power in W
X: Reverse power in W
Y: Connector type
Z: Direction type

Examples:
To order a NCI3234A series Isolator, 2000~4000MHz, Forward power 100W, Reverse power 20W, SMA female, Clockwise, specify NCI3234A-2000-4000-K1-20-S-1.

Customization is available upon request.

NCI3434E

High Power, High Isolation

Features:
* High Power
* High Isolation
* Low Insertion Loss
* Low VSWR

Applications:
* Wireless
* Radar
* Laboratory Test

Description

NCI3434E series Coaxial Isolators cover frequency range 700~3000MHz. High power, high isolation and low insertion loss make it ideal for a lot of applications like amplifiers, transceivers, etc.

Specifications

Frequency (MHz)	Bandwidth (MHz)	IL (dB Max.)	Isolation (dB Min.)	VSWR (Max.)	Fwd Power*1 (W Max.)	Rev Power (W)	Connector	Temperature (°C)
700~1300	100	0.30	23.0	1.20	200	10~100	SMA, N	-30~+70
700~1300	200	0.40	20.0	1.25	200	10~100	SMA, N	-30~+70
700~900	200	0.40	20.0	1.25	200	10~100	SMA, N	-30~+70
800~1000	200	0.40	20.0	1.25	200	10~100	SMA, N	-30~+70
890~960	70	0.25	25.0	1.15	200	10~100	SMA, N	-30~+70
950~1450	500	0.60	15.0	1.45	200	10~100	SMA, N	-30~+70
960~1215	255	0.30	21.0	1.20	200	10~100	SMA, N	-30~+70
960~1260	300	0.45	20.0	1.25	200	10~100	SMA, N	-30~+70
1030~1090	60	0.25	25.0	1.15	200	10~100	SMA, N	-30~+70
1290~1310	20	0.25	25.0	1.15	200	10~100	SMA, N	-30~+70
1300~3000	200	0.30	23.0	1.20	200	10~100	SMA, N	-30~+70
1300~3000	300	0.45	18.0	1.30	200	10~100	SMA, N	-30~+70
1350~1850	500	0.60	15.0	1.45	200	10~100	SMA, N	-30~+70
1400~1700	300	0.45	20.0	1.25	200	10~100	SMA, N	-30~+70
1700~2300	600	0.50	20.0	1.25	200	10~100	SMA, N	-30~+70
1900~2200	300	0.40	20.0	1.25	200	10~100	SMA, N	-30~+70
2100~2700	600	0.50	18.0	1.35	200	10~100	SMA, N	-30~+70
2200~2400	200	0.30	23.0	1.20	200	10~100	SMA, N	-30~+70
2300~2700	400	0.40	20.0	1.25	200	10~100	SMA, N	-30~+70
2500~2700	200	0.30	23.0	1.20	200	10~100	SMA, N	-30~+70
2700~2900	200	0.30	23.0	1.20	200	10~100	SMA, N	-30~+70
2800~3000	200	0.30	23.0	1.20	200	10~100	SMA, N	-30~+70

The size of the termination varies according to the reverse power

[1] The connector is SMA, and the maximum forward power can only reach 100W.

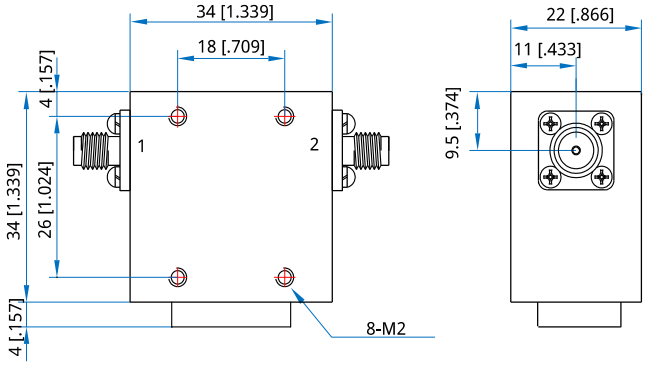

Unit: mm [inch] Tolerance: ±0.2mm [±0.008in]

Mechanical

Size*2:	34*34*22mm
	1.339*1.339*0.866in
Mounting:	8-M2

[2] Exclude connectors and terminations.

Connector Naming Rules:

S - SMA Female

Direction Naming Rules:

1 - Clockwise

2 - Anticlockwise

How To Order

NCI3434E-U-V-W-X-Y-Z

U: Start frequency in MHz

V: Stop frequency in MHz

W: Forward power in W

X: Reverse power in W

Y: Connector type

Z: Direction type

Examples:

To order a NCI3232X series Isolator, 700~806MHz, Forward power 200W, Reverse power 100W, SMA female, Clockwise, specify NCI3434E-700-806-K2-K1--S-1.

Customization is available upon request.

NCI3538X

High Power, High Isolation

Features:
* High Power
* High Isolation
* Low Insertion Loss
* Low VSWR

Applications:
* Wireless
* Radar
* Laboratory Test

Description

NCI3538X series Coaxial Isolators cover frequency range 300~1850MHz. High power, high isolation and low insertion loss make it ideal for a lot of applications like amplifiers, transceivers, etc.

Specifications

Frequency (MHz)	Bandwidth (MHz)	IL (dB Max.)	Isolation (dB Min.)	VSWR (Max.)	Fwd Power*1 (W Max.)	Rev Power (W)	Connector	Temperature (°C)
300~350	50	0.70	18.0	1.35	300	10~100	SMA, N	-30~+70
300~400	20	0.40	20.0	1.25	300	10~100	SMA, N	-30~+70
350~370	20	0.40	23.0	1.20	300	10~100	SMA, N	-30~+70
361~366	5	0.40	23.0	1.20	300	10~100	SMA, N	-30~+70
400~470	70	0.40	20.0	1.25	300	10~100	SMA, N	-30~+70
400~600	200	0.30	23.0	1.20	300	10~100	SMA, N	-30~+70
400~600	100	0.40	20.0	1.25	300	10~100	SMA, N	-30~+70
470~570	100	0.40	20.0	1.25	300	10~100	SMA, N	-30~+70
500~700	200	0.70	17.0	1.35	100	20	SMA	-40~+85
600~800	200	0.25	25.0	1.15	300	10~100	SMA, N	-30~+70
600~800	200	0.30	23.0	1.20	300	10~100	SMA, N	-30~+70
600~800	200	0.45	19.0	1.25	300	10~100	SMA, N	-30~+70
700~900	200	0.40	20.0	1.25	200	30	N	-30~+75
700~1000	300	0.25	25.0	1.15	300	10~100	SMA, N	-30~+70
700~1000	100	0.30	23.0	1.20	300	10~100	SMA, N	-30~+70
700~1000	200	0.50	18.0	1.30	300	10~100	SMA, N	-30~+70
950~1450	500	0.60	18.0	1.30	300	10~100	SMA, N	-30~+70
960~1215	255	0.30	21.0	1.20	300	10~100	SMA, N	-30~+70
960~1260	300	0.45	20.0	1.25	300	10~100	SMA, N	-30~+70
1000~1500	500	0.60	18.0	1.30	300	10~100	SMA, N	-30~+70
1020~1040	20	0.25	25.0	1.15	300	10~100	SMA, N	-30~+70
1160~1610	450	0.50	20.0	1.25	300	10~100	SMA, N	-30~+70
1290~1310	20	0.25	25.0	1.15	300	10~100	SMA, N	-30~+70
1350~1850	500	0.50	20.0	1.25	300	10~100	SMA, N	-30~+70

The size of the termination varies according to the reverse power

[1] The connector is SMA, and the maximum forward power can only reach 100W.

Outline Drawings

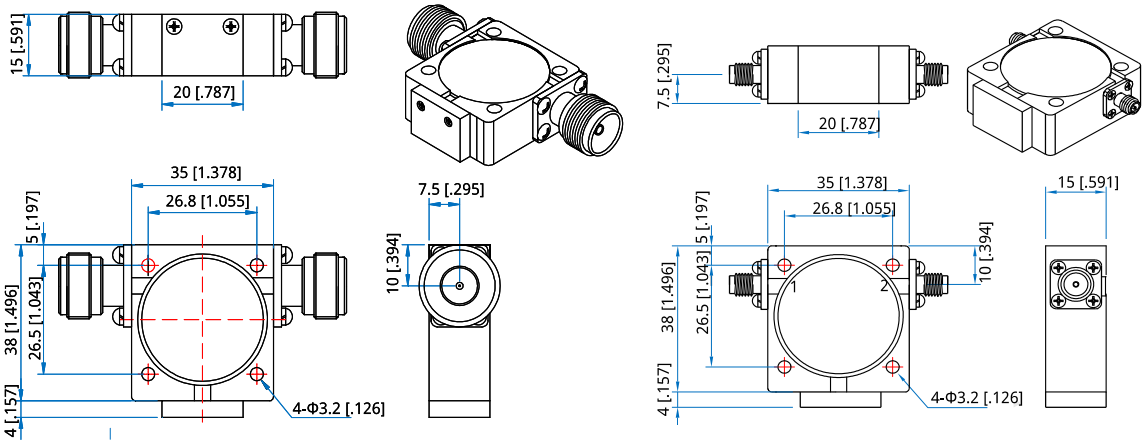

Outline A Outline B

Unit: mm [inch] Tolerance: ±0.2mm [±0.008in]

Mechanical

Size*2:	35*38*15mm
	1.378*1.496*0.591in
Mounting:	4-Φ3.2mm through-hole

[2] Exclude connectors and terminations.

Connector Naming Rules:

N - N Female (Outline A)
S - SMA Female (Outline B)

Direction Naming Rules:

1 - Clockwise
2 - Anticlockwise

How To Order

NCI3538X-U-V-W-X-Y-Z

U: Start frequency in MHz
V: Stop frequency in MHz
W: Forward power in W
X: Reverse power in W
Y: Connector type
Z: Direction type

Examples:
To order a NCI3538X series Isolator, 300~350MHz, Forward power 300W, Reverse power 100W, N female, Clockwise, specify NCI3538X-300-350-K3-K1-N-1.

Customization is available upon request.

Coaxial Isolator

NCI-4000-8000-K2-K2-N-1

4~8GHz, 200W, 200W, N Female, Clockwise

Features:
* Broadband
* High Power
* Low Insertion Loss

Applications:
* Wireless
* Radar
* Laboratory Test

Electrical

Frequency:	4~8GHz
VSWR:	1.5 max.
Insertion Loss:	0.6dB max.
Isolation:	15dB min.
Forward Power:	200W
Reverse Power:	200W

Mechanical

Size[*1]:	29.7*100*30mm 1.169*3.937*1.181in
RF Connectors:	N Female
Direction:	Clockwise

[1] Exclude connectors and terminations.

Environmental

Operating Temperature:	-20~+60°C
Non-operating Temperature:	-55~+85°C

Outline Drawings

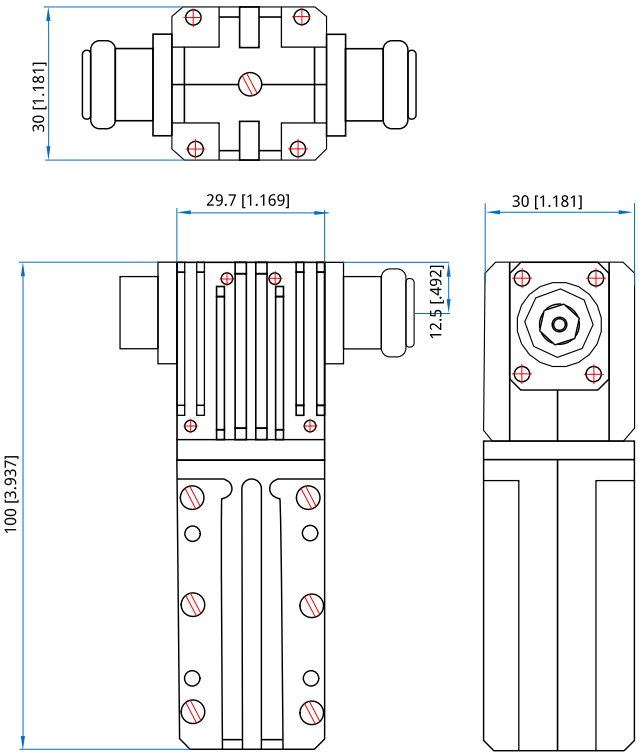

Unit: mm [in]
Tolerance: ±0.2mm [±0.008in]

How To Order

NCI-4000-8000-K2-K2-N-1

Customization is available upon request.

NCI4040A

High Power, High Isolation

Features:
* High Power
* High Isolation
* Low Insertion Loss
* Low VSWR

Applications:
* Wireless
* Radar
* Laboratory Test

Description

NCI4040A series Coaxial Isolators cover frequency range 1500~3600MHz. High power, high isolation and low insertion loss make it ideal for a lot of applications like amplifiers, transceivers, etc.

Specifications

Frequency (MHz)	Bandwidth (MHz)	IL (dB Max.)	Isolation (dB Min.)	VSWR (Max.)	Fwd Power (W Max.)	Rev Power (W)	Connector	Temperature (°C)
1500~3000	1500	0.70	17.0	1.4	100	100, 50, 30	SMA	0~+60
1500~3000	1500	0.70	17.0	1.4	100	30	N	0~+60
1800~3600	1800	0.6	17.0	1.35	100	100	SMA	0~+60

Outline Drawings

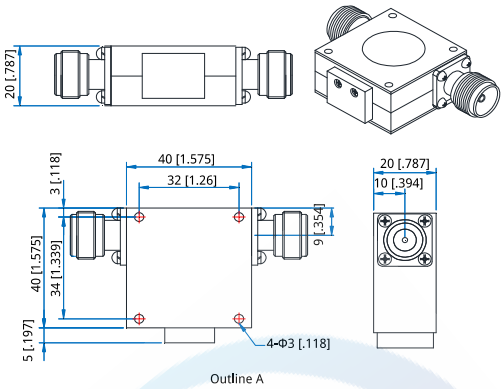

Outline A

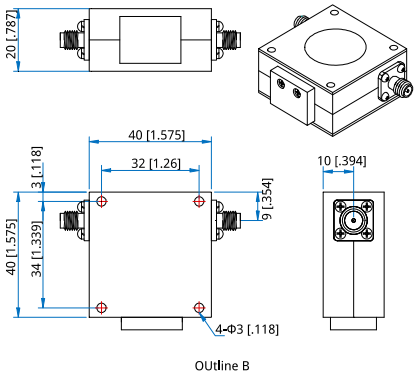

OUtline B

Unit: mm [inch] Tolerance: ±0.2mm [±0.008in]

Mechanical

Size*1: 40*40*20mm
1.575*1.575*0.787in
Mounting: 4-Φ3 through hole

[1] Exclude connectors and terminations.

Connector Naming Rules:

N - N Female (Outline A)
S - SMA Female (Outline B)

Direction Naming Rules:

1 - Clockwise
2 - Anticlockwise

How To Order

NCI4040A-U-V-W-X-Y-Z

U: Start frequency in MHz
V: Stop frequency in MHz
W: Forward power in W
X: Reverse power in W
Y: Connector type
Z: Direction type

Examples:
To order a NCI4040A series Isolator, 1500~3000MHz, Forward power 100W, Reverse power 30W, SMA female, Clockwise, specify NCI4040A-1500-3000-K1-30-S-1.

Customization is available upon request.

NCI4149A

High Power, High Isolation

Features:
* High Power
* High Isolation
* Low Insertion Loss
* Low VSWR

Applications:
* Wireless
* Radar
* Laboratory Test

Description

NCI4149A series Coaxial Isolators cover frequency range 600~1000MHz. High power, high isolation and low insertion loss make it ideal for a lot of applications like amplifiers, transceivers, etc.

Specifications

Frequency (MHz)	Bandwidth (MHz)	IL (dB Max.)	Isolation (dB Min.)	VSWR (Max.)	Fwd Power (W Max.)	Rev Power (W)	Connector	Temperature (°C)
600~1000	400	1.0	16.0	1.4	30	10	SMA	-10~+60

Outline Drawings

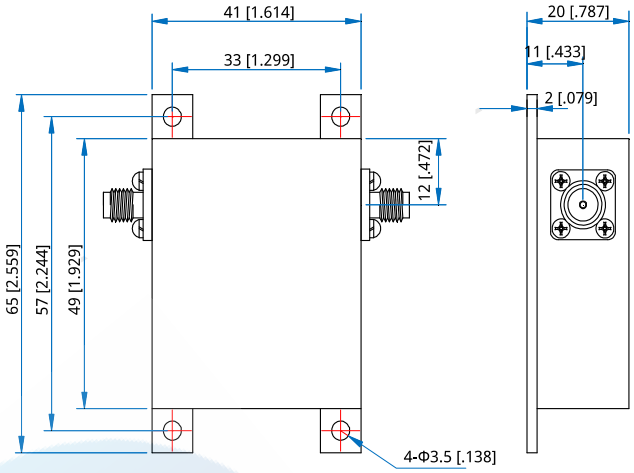

Unit: mm [inch] Tolerance: ±0.3mm [±0.012in]

Mechanical

Size*1: 41*49*20mm
1.614*1.929*0.787in
Mounting: 4-Φ3.5 through hole

[1] Exclude connectors and terminations.

Connector Naming Rules:

S - SMA Female

Direction Naming Rules:

1 - Clockwise
2 - Anticlockwise

Customization is available upon request.

How To Order

NCI4149A-U-V-W-X-Y-Z

U: Start frequency in MHz
V: Stop frequency in MHz
W: Forward power in W
X: Reverse power in W
Y: Connector type
Z: Direction type

Examples:
To order a NCI4149A series Isolator, 600~1000MHz, Forward power 30W, Reverse power 10W, SMA female, Clockwise, specify NCI4149A-600-1000-30-10-S-1.

NCI4550E

High Power, High Isolation

Features:
* High Power
* High Isolation
* Low Insertion Loss
* Low VSWR

Applications:
* Wireless
* Radar
* Laboratory Test

Description

NCI4550E series Coaxial Isolators cover frequency range 300~1100MHz. High power, high isolation and low insertion loss make it ideal for a lot of applications like amplifiers, transceivers, etc.

Specifications

Frequency (MHz)	Bandwidth (MHz)	IL (dB Max.)	Isolation (dB Min.)	VSWR (Max.)	Fwd Power*1 (W Max.)	Rev Power (W)	Connector	Temperature (°C)
300~420	20	0.30	23.0	1.20	400	10~100	SMA, N	-30~+70
300~420	30	0.40	20.0	1.25	400	10~100	SMA, N	-30~+70
300~420	120	0.60	18.0	1.30	400	10~100	SMA, N	-30~+70
361~366	5	0.20	30.0	1.15	400	10~100	SMA, N	-30~+70
400~470	70	0.40	20.0	1.25	400	10~100	SMA, N	-30~+70
400~500	30	0.30	23.0	1.20	400	10~100	SMA, N	-30~+70
400~500	100	0.40	20.0	1.25	400	10~100	SMA, N	-30~+70
500~700	50	0.40	20.0	1.25	400	10~100	SMA, N	-30~+70
500~700	150	0.50	18.0	1.30	400	10~100	SMA, N	-30~+70
700~900	200	0.40	20.0	1.25	400	10~100	SMA, N	-30~+70
700~1000	300	0.50	18.0	1.30	400	10~100	SMA, N	-30~+70
800~1000	200	0.40	20.0	1.20	400	10~100	SMA, N	-30~+70
800~1100	300	0.50	18.0	1.30	400	10~100	SMA, N	-30~+70

The size of the termination varies according to the reverse power

[1] The connector is SMA, and the maximum forward power can only reach 100W.

Outline Drawings

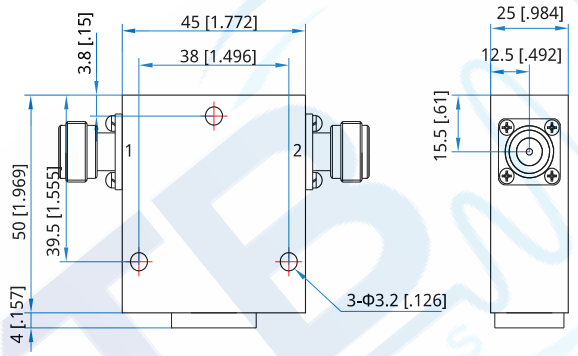

Outline A

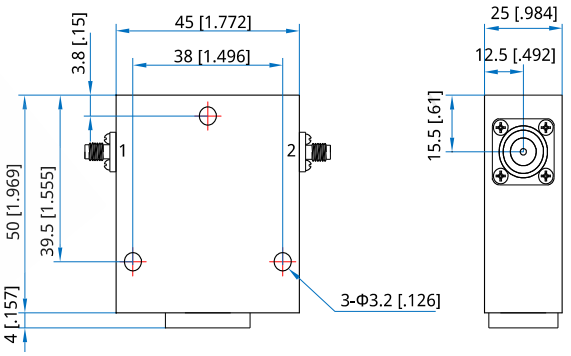

Outline B

Unit: mm [inch] Tolerance: ±0.2mm [±0.008in]

Mechanical

Size*2:	45*50*25mm
	1.772*1.969*0.984in
Mounting:	3-Φ3.2mm through-hole

[2] Exclude connectors and terminations.

Connector Naming Rules:

N - N Female (Outline A)
S - SMA Female (Outline B)

Direction Naming Rules:

1 - Clockwise
2 - Anticlockwise

How To Order

NCI4550E-U-V-W-X-Y-Z

U: Start frequency in MHz
V: Stop frequency in MHz
W: Forward power in W
X: Reverse power in W
Y: Connector type
Z: Direction type

Examples:
To order a NCI4550E series Isolator, 290~310MHz, Forward power 400W, Reverse power 100W, SMA female, Clockwise, specify NCI4550E-290-310-K4-K1-S-1.

Customization is available upon request.

NCI4550X

High Power, High Isolation

Features:
* High Power
* High Isolation
* Low Insertion Loss
* Low VSWR

Applications:
* Wireless
* Radar
* Laboratory Test

Description

NCI4550X series Coaxial Isolators cover frequency range 300~1100MHz. High power, high isolation and low insertion loss make it ideal for a lot of applications like amplifiers, transceivers, etc.

Specifications

Frequency (MHz)	Bandwidth (MHz)	IL (dB Max.)	Isolation (dB Min.)	VSWR (Max.)	Fwd Power*1 (W Max.)	Rev Power (W)	Connector	Temperature (°C)
300~420	20	0.30	23.0	1.20	400	10~100	SMA, N	-30~+70
300~420	30	0.40	20.0	1.25	400	10~100	SMA, N	-30~+70
300~420	120	0.60	18.0	1.30	400	10~100	SMA, N	-30~+70
361~366	5	0.20	30.0	1.15	400	10~100	SMA, N	-30~+70
400~470	70	0.40	20.0	1.25	400	10~100	SMA, N	-30~+70
400~500	30	0.30	23.0	1.20	400	10~100	SMA, N	-30~+70
400~500	100	0.40	20.0	1.25	400	10~100	SMA, N	-30~+70
500~700	50	0.40	20.0	1.25	400	10~100	SMA, N	-30~+70
500~700	150	0.50	18.0	1.30	400	10~100	SMA, N	-30~+70
700~900	200	0.40	20.0	1.25	400	10~100	SMA, N	-30~+70
700~1000	300	0.50	18.0	1.30	400	10~100	SMA, N	-30~+70
800~1000	200	0.40	20.0	1.20	400	10~100	SMA, N	-30~+70
800~1100	300	0.50	18.0	1.30	400	10~100	SMA, N	-30~+70

The size of the termination varies according to the reverse power

[1] The connector is SMA, and the maximum forward power can only reach 100W.

Outline Drawings

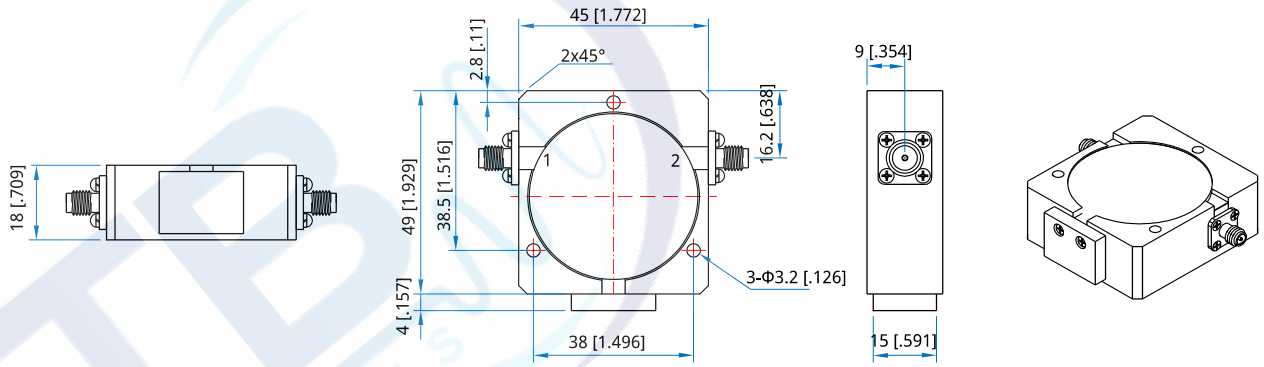

Unit: mm [inch] Tolerance: ±0.2mm [±0.008in]

Mechanical

Size*2:	45*49*18mm
	1.772*1.929*0.709in
Mounting:	3-Φ3.2mm through-hole

[2] Exclude connectors and terminations.

Connector Naming Rules:

S - SMA Female

Direction Naming Rules:

1 - Clockwise

2 - Anticlockwise

How To Order

NCI4550X-U-V-W-X-Y-Z

U: Start frequency in MHz

V: Stop frequency in MHz

W: Forward power in W

X: Reverse power in W

Y: Connector type

Z: Direction type

Examples:

To order a NCI4550X series Isolator, 400~470MHz, Forward power 400W, Reverse power 100W, SMA female, Clockwise, specify NCI4550X-400-470-K4-K1-S-1.

Customization is available upon request.

NCI5050A

High Power, High Isolation

Features:
* High Power
* High Isolation
* Low Insertion Loss
* Low VSWR

Applications:
* Wireless
* Radar
* Laboratory Test

Description

NCI5050A series Coaxial Isolators cover frequency range 1.5~3GHz. High power, high isolation and low insertion loss make it ideal for a lot of applications like amplifiers, transceivers, etc.

Specifications

Frequency (MHz)	Bandwidth (MHz)	IL (dB Max.)	Isolation (dB Min.)	VSWR (Max.)	Fwd Power (W Max.)	Rev Power (W)	Connector	Temperature (°C)
1500~3000	1500	0.70	17.0	1.40	100	10~100	SMA, N	-10~+60

Outline Drawings

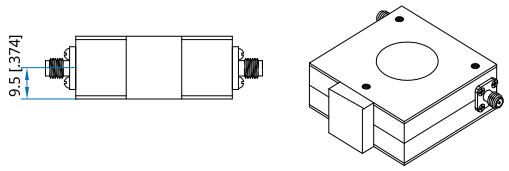

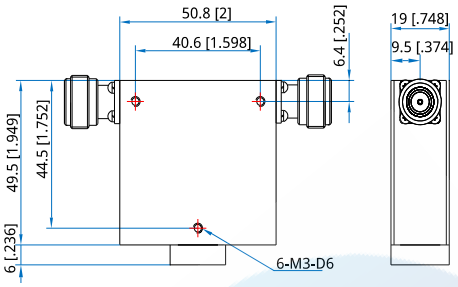

Outline A

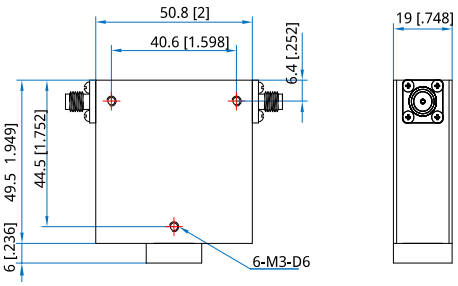

Outline B

Unit: mm [inch] Tolerance: ±0.2mm [±0.008in]

Mechanical

Size*1:	50.8*49.5*19mm
	2*1.949*0.748in
Mounting:	6-M3, depth 6mm

[1] Exclude connectors and terminations.

Connector Naming Rules:

N - N Female (Outline A)
S - SMA Female (Outline B)

Direction Naming Rules:

1 - Clockwise
2 - Anticlockwise

How To Order

NCI5050A-U-V-W-X-Y-Z

U: Start frequency in MHz
V: Stop frequency in MHz
W: Forward power in W
X: Reverse power in W
Y: Connector type
Z: Direction type

Examples:
To order a NCI5050A series Isolator, 1.5~3GHz, Forward power 100W, Reverse power 100W, SMA female, Clockwise, specify NCI5050A-1500-3000-K1-K1-S-1.
Customization is available upon request.

NCI5258E

High Power, High Isolation

Features:
* High Power
* High Isolation
* Low Insertion Loss
* Low VSWR

Applications:
* Wireless
* Radar
* Laboratory Test

Description

NCI5258Eseries Coaxial Isolators cover frequency range 160~330MHz. High power, high isolation and low insertion loss make it ideal for a lot of applications like amplifiers, transceivers, etc.

Specifications

Frequency (MHz)	Bandwidth (MHz)	IL (dB Max.)	Isolation (dB Min.)	VSWR (Max.)	Fwd Power*1 (W Max.)	Rev Power (W)	Connector	Temperature (°C)
160~200	10	0.70	18.0	1.30	500	10~100	SMA, N	-30~+70
192~232	40	0.60	18.0	1.30	500	10~100	SMA, N	-30~+70
200~220	20	0.40	20.0	1.25	500	10~100	SMA, N	-30~+70
220~240	20	0.40	20.0	1.25	500	10~100	SMA, N	-30~+70
260~330	10	0.20	23.0	1.20	500	10~100	SMA, N	-30~+70
260~330	70	0.40	20.0	1.25	500	10~100	SMA, N	-30~+70

The size of the termination varies according to the reverse power

[1] The connector is SMA, and the maximum forward power can only reach 100W.

Outline Drawings

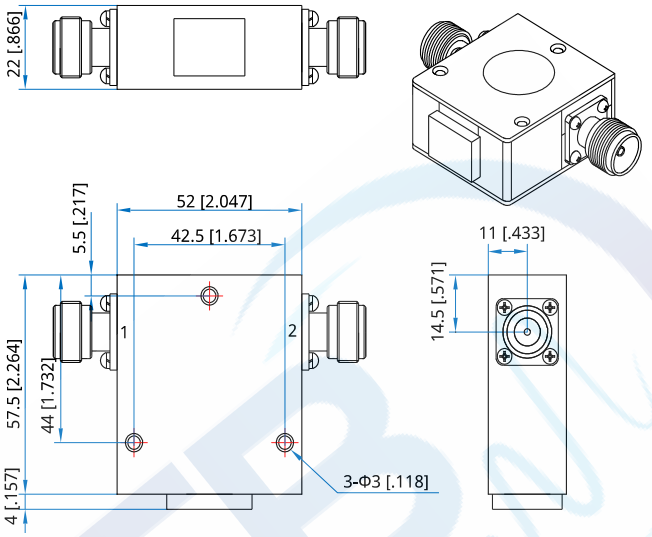

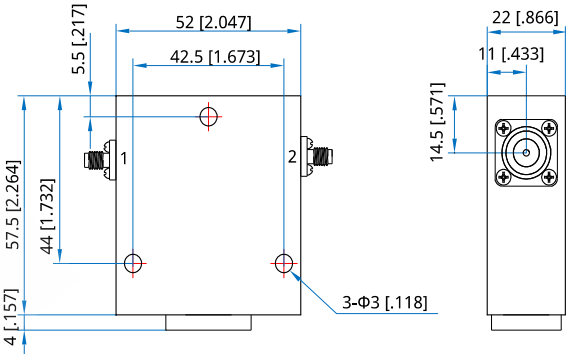

Outline B

Unit: mm [inch] Tolerance: ±0.2mm [±0.008in]

Mechanical

Size*2:	52*57.5*22mm
	2.047*2.264*0.866in
Mounting:	3-Φ3mm through-hole

[2] Exclude connectors and terminations.

Connector Naming Rules:

N - N Female (Outline A)
S - SMA Female (Outline B)

Direction Naming Rules:

1 - Clockwise
2 - Anticlockwise

How To Order

NCI5258E-U-V-W-X-Y-Z

U: Start frequency in MHz
V: Stop frequency in MHz
W: Forward power in W
X: Reverse power in W
Y: Connector type
Z: Direction typee

Examples:
To order a NCI5258E series Isolator, 170~180MHz, Forward power 500W, Reverse power 100W,N female, Clockwise, specify NCI5258E-160-200-K5-K1-N-1.

Customization is available upon request.

Coaxial Isolator

NCI-5600-5800-K2-50-N-1

5.6~5.8GHz

Features:
* Broadband
* High Power
* Low Insertion Loss

Applications:
* Wireless
* Radar
* Laboratory Test

Electrical

Frequency:	5.6~5.8GHz
Insertion Loss:	0.3dB max.
Isolation:	20dB min.
VSWR:	1.25 max.
Forward Power:	200W
Reverse Power:	50W

Mechanical

Size[*1]:	34*47*35.4mm
	1.339*1.85*1.394in
RF Connectors:	N Male
	N Female
Mounting:	3-Φ3.2mm through-hole

[1] Exclude connectors and termination.

Environmental

Temperature:	0~+60°C

Outline Drawings

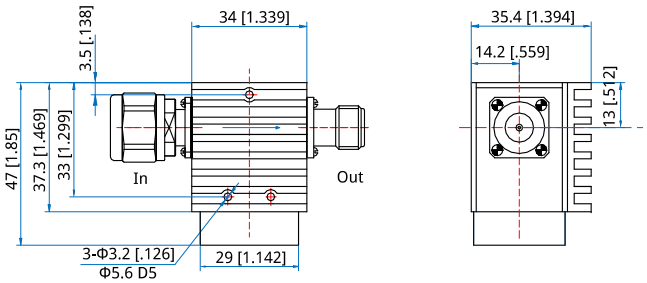

Unit: mm [in]
Tolerance: ±0.2mm [±0.008in]

How To Order

NCI-5600-5800-K2-50-N-1

Customization is available upon request.

NCI6060E

High Power, High Isolation

Features:
* High Power
* High Isolation
* Low Insertion Loss
* Low VSWR

Applications:
* Wireless
* Radar
* Laboratory Test

Description

NCI6060E series Coaxial Isolators cover frequency range 20~400MHz. High power, high isolation and low insertion loss make it ideal for a lot of applications like amplifiers, transceivers, etc.

Specifications

Frequency (MHz)	Bandwidth (MHz)	IL (dB Max.)	Isolation (dB Min.)	VSWR (Max.)	Fwd Power (W Max.)	Rev Power (W)	Connector	Temperature (°C)
20~30	0	2.00	18.0	1.30	100	10~100	SMA, N	-20~+70
30~80	0	1.20	20.0	1.25	100	10~100	SMA, N	-20~+70
30~80	5	1.80	18.0	1.30	100	10~100	SMA, N	-20~+70
54~60	6	1.0	18.0	1.30	100	100*1	N	0~+60
60~66	6	0.80	17.0	1.35	100	100*1	N	-10~+60
88~108	20	0.60	20.0	1.25	100	10~100	SMA, N	-20~+70
100~140	40	0.80	17.0	1.35	100	100	SMA	0~+60
108~118	10	0.50	20.0	1.20	100	10~100	SMA, N	-20~+70
116~138	22	0.60	20.0	1.25	100	10~100	SMA, N	-20~+70
130~180	50	0.60	20.0	1.25	100	10~100	SMA, N	-20~+70
136~174	38	0.50	20.0	1.25	100	10~100	SMA, N	-20~+70
150~170	20	0.40	20.0	1.20	100	10~100	SMA, N	-20~+70
170~230	60	0.60	20.0	1.25	100	10~100	SMA, N	-20~+70
170~240	70	0.70	18.0	1.30	50	20	SMA	0~+60
225~400	175	0.80	18.0	1.30	100	10~100	SMA, N	-20~+70

[1] Built in resistor for users to solve heat dissipation problems.

Outline Drawings

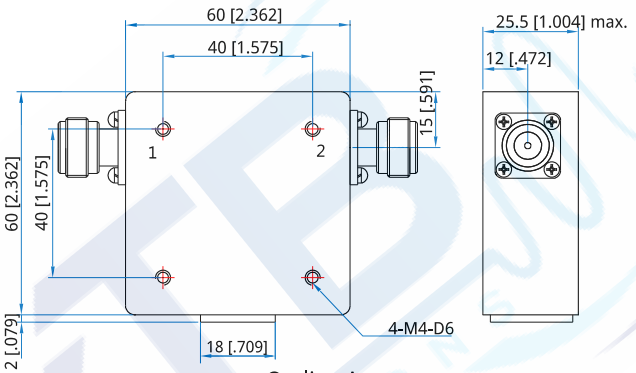

Outline A

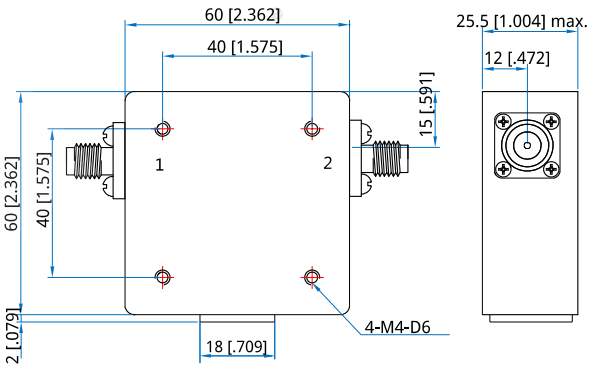

Outline B

Unit: mm [inch] Tolerance: ±0.2mm [±0.008in]

Size[*2]:	60*60*25.5mm
	2.362*2.362*1.004in
Mounting:	4-M4, depth 6mm

[2] Exclude connectors and terminations.

Connector Naming Rules:

N - N Female (Outline A)
S - SMA Female (Outline B)

How To Order

NCI6060E-W-X-Y-Z

W: Start frequency in MHz
X: Stop frequency in MHz
Y: Reverse power in W
Z: Connector type

Examples:
To order a NCI6060E series Isolator, 100~140MHz, 100W, SMA female, specify NCI6060E-100-140-100-S.

Customization is available upon request.

NCI6237A

High Power, High Isolation

Features:
* High Power
* High Isolation
* Low Insertion Loss
* Low VSWR

Applications:
* Wireless
* Radar
* Laboratory Test

Description

NCI6237A series Coaxial Isolators cover frequency range 2~8GHz. High power, high isolation and low insertion loss make it ideal for a lot of applications like amplifiers, transceivers, etc.

Specifications

Frequency (MHz)	Bandwidth (MHz)	IL (dB Max.)	Isolation (dB Min.)	VSWR (Max.)	Fwd Power (W Max.)	Rev Power (W)	Connector	Temperature (°C)
2000~6000	4000	1.30	14.0	1.60	20	5	SMA	0~+60
2000~8000	6000	1.50	13.0	1.80	20	5	SMA	0~+60

Outline Drawings

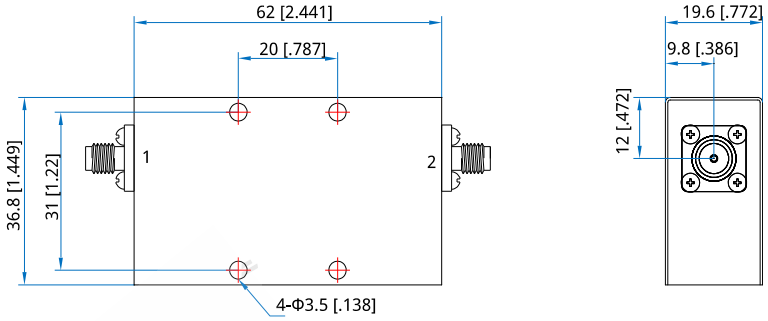

Unit: mm [inch] Tolerance: ±0.2mm [±0.008in]

Mechanical

Size[*1]: 62*36.8*19.6mm
2.441*1.449*0.772in
Mounting: 4-Φ3.5mm through-hole

[1] Exclude connectors and terminations.

Connector Naming Rules:

S - SMA Female

Direction Naming Rules:

1 - Clockwise
2 - Anticlockwise

How To Order

NCI6273A-U-V-W-X-Y-Z
U: Start frequency in MHz
V: Stop frequency in MHz
W: Forward power in W
X: Reverse power in W
Y: Connector type
Z: Direction type

Examples:
To order a NCI6237A series Isolator, 2~6GHz, Forward power 20W, Reverse power 5W, SMA female, Clockwise, specify NCI6237A-2000-6000-20-5-S-1.

Customization is available upon request.

NCI6466H

High Power, High Isolation

Features:
* High Power
* High Isolation
* Low Insertion Loss
* Low VSWR

Applications:
* Wireless
* Radar
* Laboratory Test

Description

NCI6466H series Coaxial Isolators cover frequency range 20~400MHz. High power, high isolation and low insertion loss make it ideal for a lot of applications like amplifiers, transceivers, etc.

Specifications

Frequency (MHz)	Bandwidth (MHz)	IL (dB Max.)	Isolation (dB Min.)	VSWR (Max.)	Fwd Power (W Max.)	Rev Power (W Max.)	Connector	Temperature (°C)
20~30	0	2.0	18.0	1.30	30	20	SMA, N	0~+60
30~40	0	1.2	20.0	1.25	60	20	SMA, N	0~+60
30~40	9	2.0	18.0	1.30	30	20	SMA, N	0~+60
40~60	0	1.2	20.0	1.25	60	20	SMA, N	0~+60
40~60	15	1.8	18.0	1.30	30	20	SMA, N	0~+60
60~80	3.5	1.2	20.0	1.25	60	20	SMA, N	0~+60
60~80	20	1.6	16.0	1.40	50	20	SMA, N	0~+60
88~108	20	0.6	20.0	1.25	100	100	SMA, N	0~+60
100~140	40	1.2	20.0	1.25	60	60	SMA, N	0~+60
130~180	50	0.6	20.0	1.25	100	100	SMA, N	0~+60
136~174	38	0.5	20.0	1.25	100	100	SMA, N	0~+60
150~170	20	0.4	20.0	1.20	100	100	SMA, N	0~+60
170~230	60	0.6	20.0	1.25	100	100	SMA, N	0~+60
225~400	175	0.8	18.0	1.30	100	100	SMA, N	0~+60

Outline Drawings

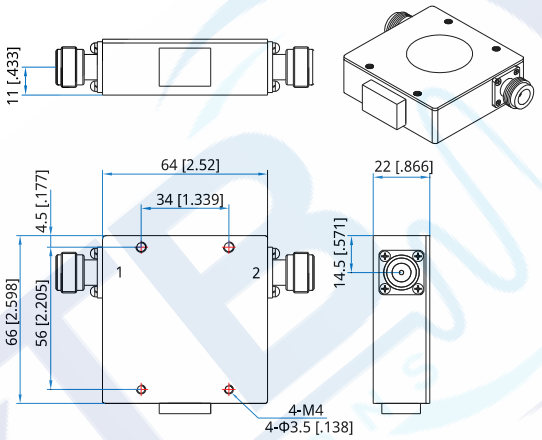

Outline A

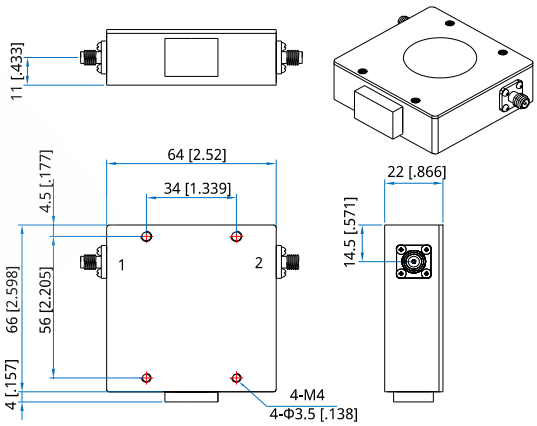

Outline B

Unit: mm [inch] Tolerance: ±0.2mm [±0.008in]

Mechanical

Size*1:	64*66*22mm
	2.52*2.598*0.866in
Mounting:	4-Φ3.5mm through-hole
	4-M4

[1] Exclude connectors and terminations.

Connector Naming Rules:

N - N Female (Outline A)

S - SMA Female (Outline B)

Direction Naming Rules:

1 - Clockwise

2 - Anticlockwise

How To Order

NCI6466H-U-V-W-X-Y-Z

U: Start frequency in MHz

V: Stop frequency in MHz

W: Forward power in W

X: Reverse power in W

Y: Connector type

Z: Direction type

Examples:

To order a NCI6466H series Isolator, 30~40MHz, Forward power 30W, Reverse power 20W, SMA female, Clockwise, specify NCI6466H-30-40-30-20-S-1.

Customization is available upon request.

NCI6466K

High Power, High Isolation

Features:
* High Power
* High Isolation
* Low Insertion Loss
* Low VSWR

Applications:
* Wireless
* Radar
* Laboratory Test

Description

NCI6466K series Coaxial Isolators cover frequency range 950~2000MHz. High power, high isolation and low insertion loss make it ideal for a lot of applications like amplifiers, transceivers, etc.

Specifications

Frequency (MHz)	Bandwidth (MHz)	IL (dB Max.)	Isolation (dB Min.)	VSWR (Max.)	Fwd Power (W Max.)	Rev Power (W)	Connector	Temperature (°C)
950~2000	1050	0.65	16.0	1.40	100	10~100	SMA, N	-30~+70
1000~2000	1000	0.60	17.0	1.40	100	10~100	SMA, N	-30~+70

The size of the termination varies according to the reverse power

Outline Drawings

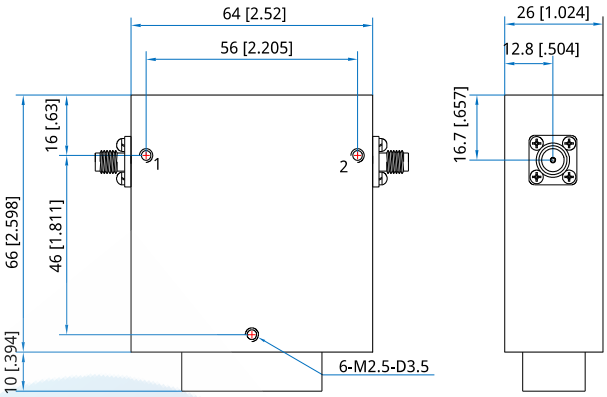

Unit: mm [inch] Tolerance: ±0.2mm [±0.008in]

Mechanical

Size*1: 64*66*26mm
2.52*2.598*1.024in
Mounting: 6-M2.5, depth 3.5mm

[1] Exclude connectors and terminations.

Connector Naming Rules:

S - SMA Female

Direction Naming Rules:

1 - Clockwise
2 - Anticlockwise

How To Order

NCI6466K-U-V-W-X-Y-Z

U: Start frequency in MHz
V: Stop frequency in MHz
W: Forward power in W
X: Reverse power in W
Y: Connector type
Z: Direction type

Examples:
To order a NCI6466K series Isolator, 950~2000MHz, Forward power 100W, Reverse power 100W, SMA female, Clockwise, specify NCI6466K-950-2000-K1-K1-S-1.

Customization is available upon request.

Dual Junction Coaxial Isolators

NCI7448H

High Power, High Isolation

Features:
* High Power
* High Isolation
* Low Insertion Loss
* Low VSWR

Applications:
* Wireless
* Radar
* Laboratory Test

Description

NCI7448H series Coaxial Isolators cover frequency range 450~2700MHz. High power, high isolation and low insertion loss make it ideal for a lot of applications like amplifiers, transceivers, etc.

Specifications

Frequency (MHz)	Bandwidth (MHz)	IL (dB Max.)	Isolation (dB Min.)	VSWR (Max.)	Fwd Power*1 (W Max.)	Rev Power (W)	Connector	Temperature (°C)
450~470	20	0.80	45.0	1.25	250	10~100	SMA, N	-30~+70
725~825	100	0.80	40.0	1.20	250	10~100	SMA, N	-30~+70
805~824	19	0.50	60.0	1.20	250	10~100	SMA, N	-30~+70
850~869	19	0.50	60.0	1.20	250	10~100	SMA, N	-30~+70
860~960	100	0.80	40.0	1.20	250	10~100	SMA, N	-30~+70
1800~2170	370	0.80	40.0	1.25	250	10~100	SMA, N	-30~+70
2110~2170	60	0.60	50.0	1.20	250	10~100	SMA, N	-30~+70
2300~2700	400	0.80	38.0	1.25	250	10~100	SMA, N	-30~+70

[1] The connector is SMA, and the maximum forward power can only reach 100W.

Outline Drawings

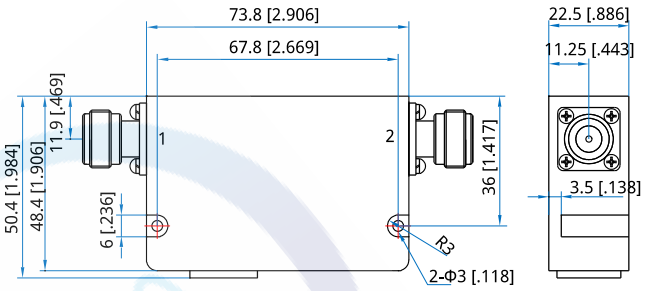

Unit: mm [inch] Tolerance: ±0.2mm [±0.008in]

Mechanical

Size*2:	73.8*48.4*22.5mm
	2.906*1.906*0.886in
Mounting:	2-Φ3mm through-hole

[2] Exclude connectors and terminations.

Connector Naming Rules:

N - N Female

Direction Naming Rules:

1 - Clockwise
2 - Anticlockwise

How To Order

NCI7448H-U-V-W-X-Y-Z

U: Start frequency in MHz
V: Stop frequency in MHz
W: Forward power in W
X: Reverse power in W
Y: Connector type
Z: Direction type

Examples:
To order a NCI7448H series Isolator, 450~470MHz, Forward power 200W, Reverse power 100W, N female, Clockwise, specify NCI7448-450-470-K2-K1-N-1.

Customization is available upon request.

Dual Junction Coaxial Isolators

NCI9648H

High Power, High Isolation

Features:
* High Power
* High Isolation
* Low Insertion Loss
* Low VSWR

Applications:
* Wireless
* Radar
* Laboratory Test

Description

NCI9648H series Coaxial Isolators cover frequency range 350~470MHz. High power, high isolation and low insertion loss make it ideal for a lot of applications like amplifiers, transceivers, etc.

Specifications

Frequency (MHz)	Bandwidth (MHz)	IL (dB Max.)	Isolation (dB Min.)	VSWR (Max.)	Fwd Power*1 (W Max.)	Rev Power (W)	Connector	Temperature (°C)
350~370	20	0.50	50.0	1.20	150	100	SMA, N	-30~+70
361~366	5	0.40	60.0	1.15	150	100	SMA, N	-30~+70
380~400	20	0.60	50.0	1.20	150	100	SMA, N	-30~+70
400~430	30	0.60	50.0	1.20	150	100	SMA, N	-30~+70
400~470	70	0.70	40.0	1.25	150	100	SMA, N	-30~+70
438~448	10	0.60	50.0	1.20	150	100	SMA, N	-30~+70
443~453	10	0.60	50.0	1.20	150	100	SMA, N	-30~+70
450~470	20	0.60	50.0	1.20	150	100	SMA, N	-30~+70

[1] The connector is SMA, and the maximum forward power can only reach 100W.

Outline Drawings

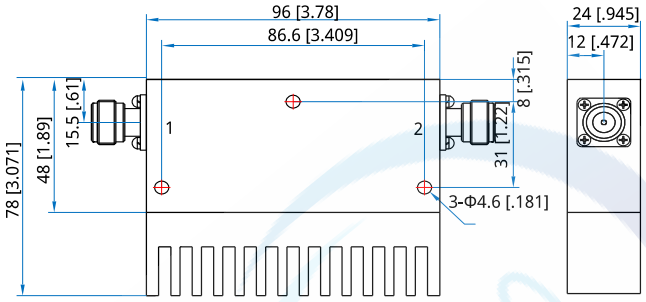

Unit: mm [inch] Tolerance: ±0.2mm [±0.008in]

Mechanical

Size*2: 96*48*24mm
3.78*1.89*0.945in
Mounting: 3-Φ4.6mm through-hole

[2] Exclude connectors and terminations.

Connector Naming Rules:

N - N Female

Direction Naming Rules:

1 - Clockwise
2 - Anticlockwise

How To Order

NCI9648H-U-V-W-X-Y-Z

U: Start frequency in MHz
V: Stop frequency in MHz
W: Forward power in W
X: Reverse power in W

Y: Connector type
Z: Direction type

Examples:
To order a NCI9648H series Isolator, 350~370MHz, Forward power 150W, Reverse power 100W, N female, Clockwise, specify NCI9648H-350-370-K15-K1-N-1.

Customization is available upon request.

Dual Junction Coaxial Isolators

NCI9650H

High Power, High Isolation

Features:
* High Power
* High Isolation
* Low Insertion Loss
* Low VSWR

Applications:
* Wireless
* Radar
* Laboratory Test

Description

NCI9650H series Coaxial Isolators cover frequency range 350~470MHz. High power, high isolation and low insertion loss make it ideal for a lot of applications like amplifiers, transceivers, etc.

Specifications

Frequency (MHz)	Bandwidth (MHz)	IL (dB Max.)	Isolation (dB Min.)	VSWR (Max.)	Fwd Power*1 (W Max.)	Rev Power (W)	Connector	Temperature (°C)
350~370	20	0.50	50.0	1.20	150	100	SMA, N	-30~+70
361~366	5	0.40	60.0	1.15	150	100	SMA, N	-30~+70
380~400	20	0.60	50.0	1.20	150	100	SMA, N	-30~+70
400~430	30	0.60	50.0	1.20	150	100	SMA, N	-30~+70
400~470	70	0.70	40.0	1.25	150	100	SMA, N	-30~+70
438~448	10	0.60	50.0	1.20	150	100	SMA, N	-30~+70
443~453	10	0.60	50.0	1.20	150	100	SMA, N	-30~+70
450~470	20	0.60	50.0	1.20	150	100	SMA, N	-30~+70

[1] The connector is SMA, and the maximum forward power can only reach 100W.

Outline Drawings

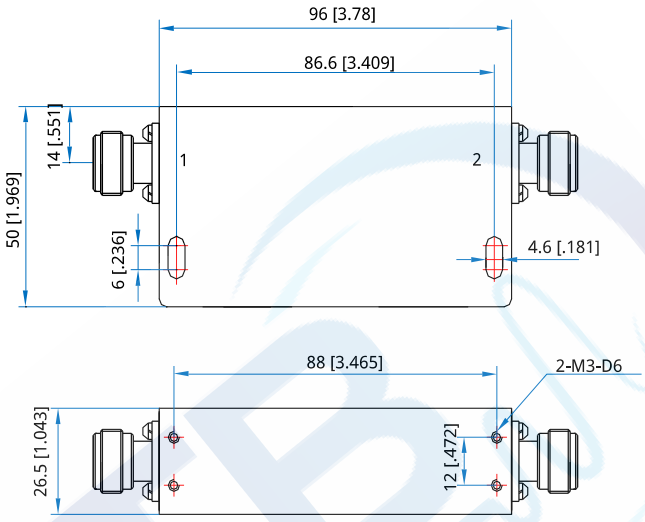

Unit: mm [inch] Tolerance: ±0.2mm [±0.008in]

Mechanical

Size*2:	96*50*26.5mm
	3.78*1.969*1.043in
Mounting:	2-M3, depth 6mm

[2] Exclude connectors and terminations.

Connector Naming Rules:

N - N Female

Direction Naming Rules:

1 - Clockwise
2 - Anticlockwise

How To Order

NCI9650H-U-V-W-X-Y-Z

U: Start frequency in MHz
V: Stop frequency in MHz
W: Forward power in W
X: Reverse power in W
Y: Connector type
Z: Direction type

Examples:

To order a NCI9650H series Isolator, 361~366MHz, Forward power 150W, Reverse power 100W, N female, Clockwise, specify NCI9650H-361-366-K15-K1-N-1.

Customization is available upon request.

Dual Junction Coaxial Isolators

NCI9662H

High Power, High Isolation

Features:
* High Power
* High Isolation
* Low Insertion Loss
* Low VSWR

Applications:
* Wireless
* Radar
* Laboratory Test

Description

NCI9662H series Coaxial Isolators cover frequency range 350~470MHz. High power, high isolation and low insertion loss make it ideal for a lot of applications like amplifiers, transceivers, etc.

Specifications

Frequency (MHz)	Bandwidth (MHz)	IL (dB Max.)	Isolation (dB Min.)	VSWR (Max.)	Fwd Power*1 (W Max.)	Rev Power (W)	Connector	Temperature (°C)
350~370	20	0.50	50.0	1.20	150	100	SMA, N	-30~+70
361~366	5	0.40	60.0	1.15	150	100	SMA, N	-30~+70
380~400	20	0.60	50.0	1.20	150	100	SMA, N	-30~+70
400~430	30	0.60	50.0	1.20	150	100	SMA, N	-30~+70
400~470	70	0.70	40.0	1.25	150	100	SMA, N	-30~+70
438~448	10	0.60	50.0	1.20	150	100	SMA, N	-30~+70
443~453	10	0.60	50.0	1.20	150	100	SMA, N	-30~+70
450~470	20	0.60	50.0	1.20	150	100	SMA, N	-30~+70

[1] The connector is SMA, and the maximum forward power can only reach 100W.

Outline Drawings

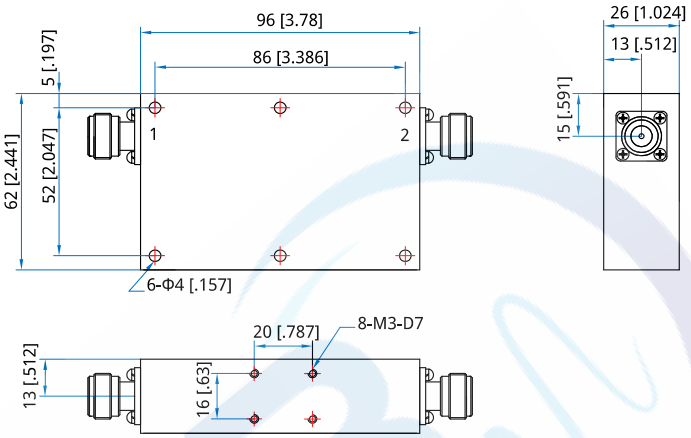

Unit: mm [inch] Tolerance: ±0.2mm [±0.008in]

Mechanical

Size*2: 96*62*26mm
3.78*2.441*1.024in
Mounting: 6-Φ4mm through-hole
8-M3, depth 7mm

[2] Exclude connectors and terminations.

Connector Naming Rules:

N - N Female

Direction Naming Rules:

1 - Clockwise
2 - Anticlockwise

How To Order

NCI9662H-U-V-W-X-Y-Z
U: Start frequency in MHz
V: Stop frequency in MHz
W: Forward power in W
X: Reverse power in W
Y: Connector type
Z: Direction type

Examples:
To order a NCI9662H series Isolator, 420~430MHz, Forward power 150W, Reverse power 100W, N female, Clockwise, specify NCI9662H-420-430-K15-K1-N-1.

Customization is available upon request.

Dual Junction Coaxial Isolators

NDCI7038X

High Power, High Isolation

Features:
* High Power
* High Isolation
* Low Insertion Loss
* Low VSWR

Applications:
* Wireless
* Radar
* Laboratory Test

Description

NDCI7038X series Coaxial Isolators cover frequency range 800~1000MHz. High power, high isolation and low insertion loss make it ideal for a lot of applications like amplifiers, transceivers, etc.

Specifications

Frequency (MHz)	Bandwidth (MHz)	IL (dB Max.)	Isolation (dB Min.)	VSWR (Max.)	Fwd Power (W Max.)	Rev Power (W)	Connector	Temperature (℃)
800~1000	200	1.0	35	1.35	100	20	SMA	-30~+70

Outline Drawings

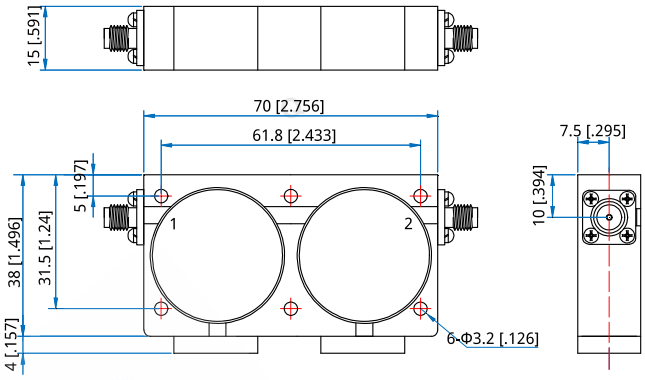

Unit: mm [inch] Tolerance: ±0.2mm [±0.008in]

Mechanical

Size[*1]: 70*38*15mm
2.756*1.496*0.591in
Mounting: 6-Φ3.2mm through-hole

[1] Exclude connectors and terminations.

Connector Naming Rules:

S - SMA Female

Direction Naming Rules:

1 - Clockwise
2 - Anticlockwise

How To Order

NDCI7038X-U-V-W-X-Y-Z
U: Start frequency in MHz
V: Stop frequency in MHz
W: Forward power in W
X: Reverse power in W
Y: Connector type
Z: Direction type

Examples:
To order a NDCI7038X series Isolator, 800~1000MHz, Forward power 100W, Reverse power 20W, SMA female, Clockwise, specify NDCI7038X-800-1000-K1-20-S-1.

Customization is available upon request.