Digital Controlled Attenuator

NDA-0.1-5000-110-1

0.1MHz~5GHz, 110dB, 1dB

Features:
* Broadband
* High Dynamic Range

Applications:
* Wireless
* Transmitter
* Laboratory Test
* Radar

Electrical

Frequency:	100KHz~5GHz
Insertion Loss:	8dB max.
Attenuation Flatness:	±2.5dB max.
Control Bits:	7
Step:	1dB
Attenuation Range:	0~110dB
Attenuation Accuracy:	±3dB max.
Switching Time:	500nS max.
Input VSWR:	2.5 max.
Output VSWR:	2.5 max.
Voltage:	±5V DC
Current:	0.1A typ.
Input Power Without Damage:	30dBm max.

Mechanical

Size[*1]:	70*55*16mm 2.756*2.165*0.630in
Weight:	300g typ.
RF Connectors:	SMA Female
Power Supply & Control Interface Connectors:	J30J-15ZKP
Mounting:	4-Φ2.8mm through-hole

[1] Exclude connectors.

Environmental

Operating Temperature:	-40~+60℃
Non-operating Temperature:	-55~+70℃

Outline Drawings

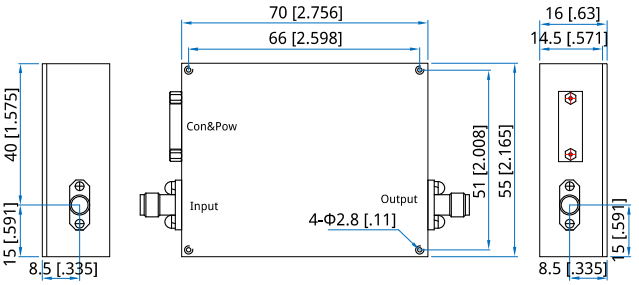

Unit: mm [in]
Tolerance: ±0.2mm [±0.008in]

Pin Numbering

Pin	Function	Pin	Function
1	+5V	7	8dB
2	-5V	8	16dB
3	GND	9	30dB
4	1dB (LSB)	10	50dB (MSB)
5	2dB	11~13	NC
6	4dB	14~15	GND

How To Order

NDA-0.1-5000-110-1

Customization is available upon request.

NDA-0-18000-110-10

DC~18GHz, 110dB, 10dB

Features:
* Low VSWR
* High Attenuation Flatness

Applications:
* Wireless
* Transmitter
* Laboratory Test
* Radar

Electrical

Frequency:	DC~18GHz
Attenuation Range:	0~110dB
Step:	10dB
Average Power:	+30dBm max.
Impedance:	50Ω
Voltage:	24V DC
Current:	2A min.

Mechanical

Size*1:	135.5*44*22.5mm 5.335*1.732*0.886in
RF Connectors:	SMA Female
Power Supply & Control Interface Connectors:	DB9F

Environmental

Operating Temperature:	-20~+70°C

Outline Drawings

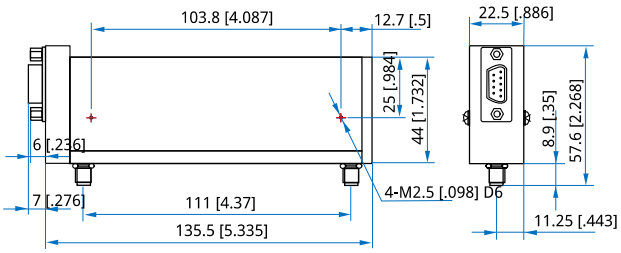

Unit: mm [in]
Tolerance: ±2mm [±0.08in]

How To Order

NDA-0-18000-110-10

Customization is available upon request.

Attenuation Accuracy and VSWR

Frequency (GHz)	Attenuation Accuracy (±dB) vs. Attenuation (dB)				VSWR (max.)	Insertion Loss (max.)
	11	50	90	110		
DC~8	±0.8	±1.6	±3.2	±4.0	1.6	
DC~12.4	±0.8	±2.1	±3.2	±4.5	1.6	0.6+0.09/GHz
DC~18	±1.0	±2.1	±3.7	±4.5	1.75	

NDA-0-18000-11-1

DC~18GHz, 11dB, 1dB

Features:
* Low VSWR
* High Attenuation Flatness

Applications:
* Wireless
* Transmitter
* Laboratory Test
* Radar

Electrical

Frequency:	DC~18GHz
Attenuation Range:	0~11dB
Step:	1dB
Average Power:	+30dBm max.
Impedance:	50Ω
Voltage:	24V DC
Current:	2A min.

Mechanical

Size*1:	135.5*44*22.5mm 5.335*1.732*0.886in
RF Connectors:	SMA female
Power Supply & Control Interface Connectors:	DB9F

Environmental

Operating Temperature:	-20~+70°C

Outline Drawings

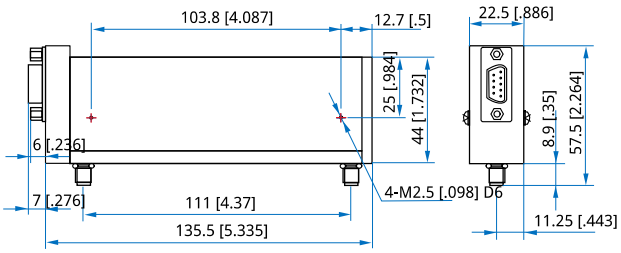

Unit: mm [in]
Tolerance: ±2mm [±0.08in]

How To Order

NDA-0-8000-11-1
NDA-0-12400-11-1
NDA-0-18000-11-1

Customization is available upon request.

Attenuation Accuracy and VSWR

Frequency (GHz)	Attenuation Accuracy (±dB) vs. Attenuation (dB) 11	VSWR (max.)	Insertion Loss (max.)
DC~8	±0.8	1.6	
DC~12.4	±0.8	1.6	0.6+0.09/GHz
DC~18	±1.0	1.75	

Digital Controlled Attenuator

NDA-0-6000-30-1

DC~6GHz, 30dB, 1dB

Features:
* Broadband
* High Dynamic Range

Applications:
* Wireless
* Transmitter
* Laboratory Test
* Radar

Electrical

Frequency:	DC~6GHz
Insertion Loss:	2dB typ.
Attenuation Range:	0~30dB
Step:	1dB
Attenuation Accuracy:	3~5% of attenuation setting typ.
SWR:	1.5 typ.
Input Power:	+20dBm max.
Impedance:	50Ω

Mechanical

Size*1:	30*20*8mm 1.181*0.787*0.315in
Weight:	100g max.
RF Connectors:	SMA Female
Power Supply & Control Interface:	Feed Through/Terminal Post
Mounting:	3-Φ2.1mm through-hole 4-M2, depth 4mm

[1] Exclude connectors.

Enironmental

Operating Temperature:	-20~+60℃
Non-operating Temperature:	-40~+85℃

Outline Drawings

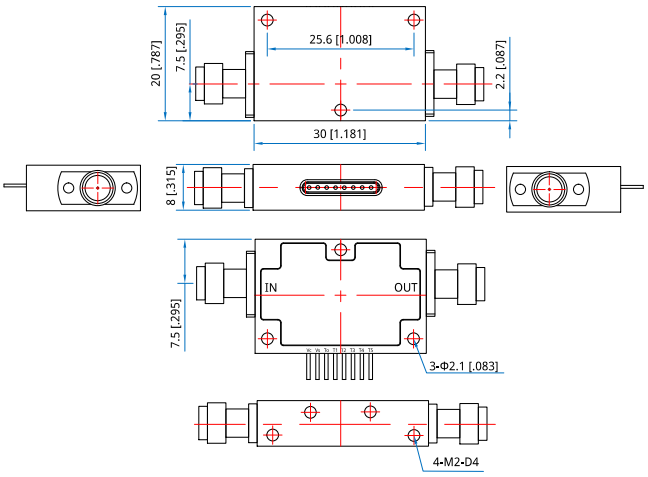

Unit: mm [in]

Tolerance: ±0.2mm [±0.008in]

Logic Table

Bias oltage (V)	Control (V)						Stage
VEE	T0	T1	T2	T3	T4	T5	
-5	0	0	0	0	0	0	Reference IL
-5	0	0	0	0	0	3.3	1dB
-5	0	0	0	0	3.3	0	2dB
-5	0	0	0	3.3	0	0	4dB
-5	0	0	3.3	0	0	0	8dB
-5	0	3.3	0	0	0	0	16dB

How To Order

NDA-0-6000-30-1

Customization is aailable upon requFFest.

Digital Controlled Attenuator

NDA-1000-18000-31.5-0.5

1~18GHz, 31.5dB, 0.5dB

Features:
* Broadband
* High Dynamic Range

Applications:
* Wireless
* Transmitter
* Laboratory Test
* Radar

Electrical

Frequency:	1~18GHz
Insertion Loss:	5.5dB max.
Attenuation Flatness:	±0.7dB typ. @10dB
	±1dB typ. @30dB
Step:	0.5dB
Attenuation Range:	0~31.5dB
Attenuation Accuracy:	±0.8dB typ. @0~10dB
	±1dB typ. @30dB
VSWR:	2 max.
Voltage/Current:	-5V @15mA typ.
Input Power:	+25dBm max.

Mechanical

Size*1:	32*20*12.7mm
	1.26*0.787*0.5in
RF Connectors:	SMA Female
Power Supply & Control Interface Connectors:	MICRO-D15-Female
Mounting:	4-Φ2.7 through-hole
Logic Input:	On: 1(+3~+5V)
	Off: 0(0~+0.5V)

[1] Exclude connectors.

Pin Numbering

Pin	Function	Pin	Function
1	-5V	6	C3
2	COM	7	C4
3	NC	8	C5
4	C1	9	C6
5	C2	10~15	NC

Environmental

Operating Temperature:	-45~+85℃
Non-operating Temperature:	-55~+125℃

Outline Drawings

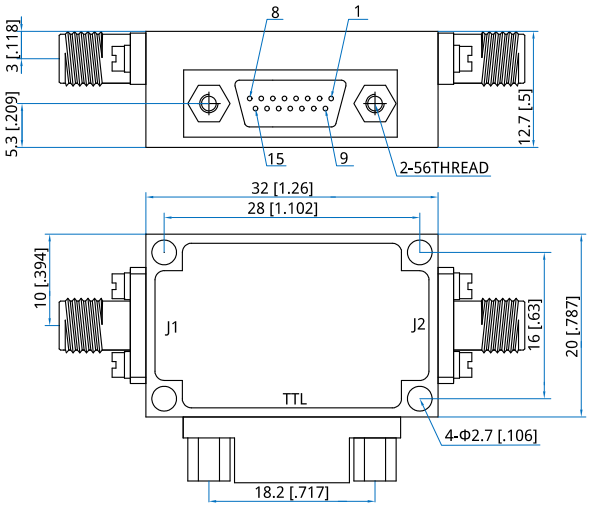

Unit: mm [in]
Tolerance: ±0.2mm [±0.008in]

Logic Table

State	C1	C2	C3	C4	C5	C6	Attenuation State
-	0	0	0	0	0	0	Reference IL
1	1	0	0	0	0	0	0.5dB
2	0	1	0	0	0	0	1dB
3	0	0	1	0	0	0	2dB
4	0	0	0	1	0	0	4dB
5	0	0	0	0	1	0	8dB
6	0	0	0	0	0	1	16dB
7	1	1	1	1	1	1	31.5dB

How To Order

NDA-1000-18000-31.5-0.5

Customization is available upon request.

Digital Controlled Attenuator

NDA-1000-18000-31.5-0.5-1

1~18GHz, 31.5dB, 0.5dB

Features:
* Broadband
* High Dynamic Range

Applications:
* Wireless
* Transmitter
* Laboratory Test
* Radar

Electrical

Frequency:	1~18GHz
Insertion Loss:	5.5dB max.
Attenuation Flatness:	±0.7dB typ. @0.5~16dB
	±1dB typ. @17.5~31.5dB
Step:	0.5dB
Attenuation Range:	0~31.5dB
Attenuation Accuracy:	±0.8dB typ. @0.5~16dB
	±1dB typ. @17.5~31.5dB
VSWR:	2 max.
Voltage/Current:	-5V @15mA typ.
Input Power:	+25dBm max.

Mechanical

Size[*1]:	32*20*12.7mm
	1.26*0.787*0.5in
RF Connectors:	SMA Female
Power Supply & Control Interface Connectors:	J30J-15ZKP
Mounting:	4-Φ2.7mm through-hole
Logic Input:	On: 1(+3~+5V)
	Off: 0(0~+0.5V)

[1] Exclude connectors.

Pin Numbering

Pin	Function	Pin	Function
1	-5V	7	C4:-4dB
2	GND	8	C5:-8dB
3	NC	9	C6:-16dB
4	C1:-0.5dB	10	NC
5	C2:-1dB	11~15	NC
6	C3:-2dB		

Environmental

Operating Temperature:	-45~+85°C
Non-operating Temperature:	-55~+125°C

Outline Drawings

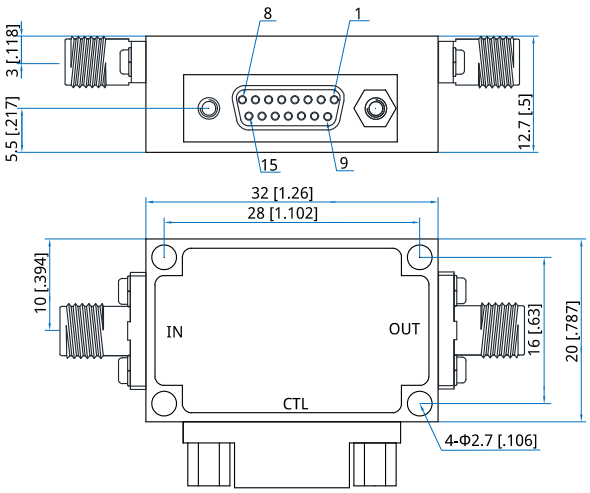

Unit: mm [in]
Tolerance: ±0.2mm [±0.008in]

Logic Table

State	C1	C2	C3	C4	C5	C6	Attenuation State
-	0	0	0	0	0	0	Reference IL
1	1	0	0	0	0	0	0.5dB
2	0	1	0	0	0	0	1dB
3	0	0	1	0	0	0	2dB
4	0	0	0	1	0	0	4dB
5	0	0	0	0	1	0	8dB
6	0	0	0	0	0	1	16dB
7	1	1	1	1	1	1	31.5dB

How To Order

NDA-1000-18000-31.5-0.5-1

Customization is available upon request.

Digital Controlled Attenuator

NDA-1000-20000-63.5-0.5

1~20GHz, 63.5dB, 0.5dB

Features:
* Broadband
* High Dynamic Range

Applications:
* Wireless
* Transmitter
* Laboratory Test
* Radar

Electrical

Frequency:	1~20GHz
Insertion Loss:	7dB max.
Attenuation Flatness:	±1.2dB typ.@30dB
	±2dB typ.@60dB
Step:	0.5dB
Attenuation Range:	0~63.5dB
Attenuation Accuracy:	±1.2dB typ.@0-30dB
	±3dB typ.@30-63.5dB
VSWR:	1.8 max.
Voltage/Current:	+3.3V @20mA Max.
Input Power:	+25dBm max.

Mechanical

Size[*1]:	34*18*12mm
	1.339*0.709*0.472in
Swiching Time:	200 nsec
RF Connectors:	SMA Female
Power Supply & Control	D-Sub 15
Interface Connectors:	
Housing Material:	Nickel Plated
Mounting:	4-Φ2.7 through-hole
Logic Input:	On: 1(+1.2~3.3V)
	Off: 0(0~0.8V)

[1] Exclude connectors.

Pin Numbering

Pin	Function	Pin	Function
1	+3.3V	7	C4
2	COM	8	C5
3	-3.3V	9	C6
4	C1	10	C7
5	C2	11-15	NC
6	C3		

Environmental

Operating Temperature:	-45~+85℃
Non-operating Temperature:	-55~+125℃

Outline Drawings

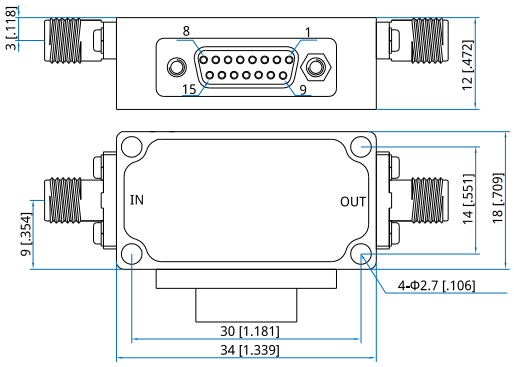

Unit: mm [in]
Tolerance: ±0.2mm [±0.008in]

Logic Table

State	C1	C2	C3	C4	C5	C6	C7	Att.
								63.5dB
-	0	0	0	0	0	0	0	Reference IL
1	1	0	0	0	0	0	0	0.5dB
2	0	1	0	0	0	0	0	1dB
3	0	0	1	0	0	0	0	2dB
4	0	0	0	1	0	0	0	4dB
5	0	0	0	0	1	0	0	8dB
6	0	0	0	0	0	1	0	16dB
7	0	0	0	0	0	0	1	32dB
8	1	1	1	1	1	1	1	63.5dB

How To Order

NDA-1000-20000-63.5-0.5

Customization is available upon request.

Digital Controlled Attenuator

NDA-1000-2000-31.5-0.5

1~2GHz, 31.5dB, 0.5dB

Features:
* Broadband
* High Dynamic Range

Applications:
* Wireless
* Transmitter
* Laboratory Test
* Radar

Electrical

Frequency:	1~2GHz
Insertion Loss:	3.6dB max.
Attenuation Flatness:	±0.4dB typ. @0.5~16dB
	±0.5dB typ. @17.5~31.5dB
Step:	0.5dB
Attenuation Range:	0~31.5dB
Attenuation Accuracy:	±0.5dB typ. @0.5~16dB
	±0.5dB typ. @17.5~31.5dB
VSWR:	1.8 max.
Voltage/Current:	-5V @15mA typ.
Input Power:	+25dBm max.

Mechanical

Size[*1]:	32*20*12.7mm
	1.26*0.787*0.5in
RF Connectors:	SMA Female
Power Supply & Control Interface Connectors:	J30J-15ZKP
Mounting:	4-Φ2.7mm through-hole
Logic Input:	On: 1(+3~+5V)
	Off: 0(0~+0.5V)

[1] Exclude connectors.

Pin Numbering

Pin	Function	Pin	Function
1	-5V	7	C4:-4dB
2	GND	8	C5:-8dB
3	NC	9	C6:-16dB
4	C1:-0.5dB	10	NC
5	C2:-1dB	11~15	NC
6	C3:-2dB		

Environmental

Operating Temperature:	-45~+85°C
Non-operating Temperature:	-55~+125°C

Outline Drawings

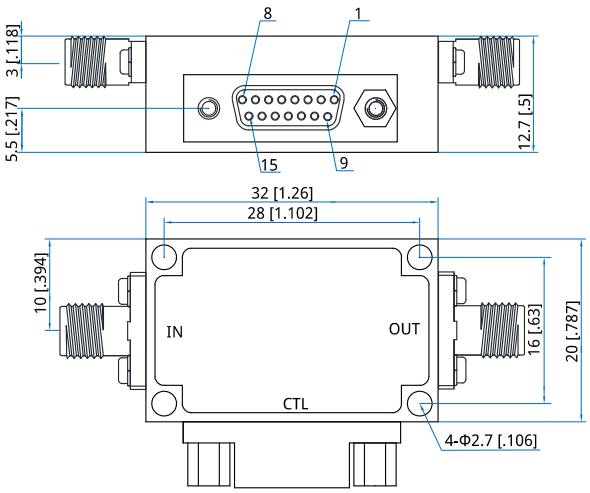

Unit: mm [in]
Tolerance: ±0.2mm [±0.008in]

Logic Table

State	C1	C2	C3	C4	C5	C6	Attenuation State
-	0	0	0	0	0	0	Reference IL
1	1	0	0	0	0	0	0.5dB
2	0	1	0	0	0	0	1dB
3	0	0	1	0	0	0	2dB
4	0	0	0	1	0	0	4dB
5	0	0	0	0	1	0	8dB
6	0	0	0	0	0	1	16dB
7	1	1	1	1	1	1	31.5dB

How To Order

NDA-1000-2000-31.5-0.5

Customization is available upon request.

Digital Controlled Attenuator

NDA-1000-2000-47.5-0.5

1~2GHz, 47.5dB, 0.5dB

Features:
* Broadband
* High Dynamic Range

Applications:
* Wireless
* Transmitter
* Laboratory Test
* Radar

Electrical

Frequency:	1~2GHz
Insertion Loss:	3.5dB max.
Attenuation Flatness:	±0.5dB max.
Control Bits:	7
Step:	0.5dB
Attenuation Range:	0~47.5dB
Attenuation Accuracy:	3% of attenuation setting max.
Switching Time:	100nS max.
VSWR:	1.5 max. @Attenuation 0dB
Voltage:	+5V DC
Current:	0.2A typ.
Input Power:	27dBm max.

Mechanical

Size[*1]:	45*35*15mm
	1.772*1.378*0.591in
RF Connectors:	SMA Female
Power Supply & Control Interface Connectors:	J30J-9ZKP
Mounting:	4-Φ2.8mm through-hole

[1] Exclude connectors.

Environmental

Operating Temperature:	-40~+70℃
Non-operating Temperature:	-55~+70℃

Outline Drawings

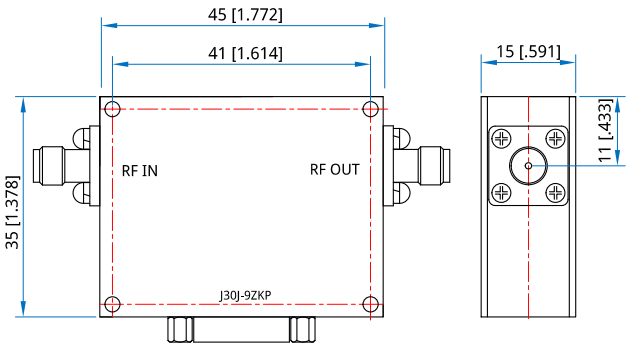

Unit: mm [in]
Tolerance: ±0.2mm [±0.008in]

Pin Numbering

Pin	Function	Pin	Function
1	+5V	6	4dB
2	GND	7	8dB
3	0.5dB	8	16dB
4	1dB	9	16dB
5	2dB		

How To Order

NDA-1000-2000-47.5-0.5

Customization is available upon request.

Digital Controlled Attenuator

NDA-1000-2000-63.5-0.5

1~2GHz, 63.5dB, 0.5dB

Features:
* Broadband
* High Dynamic Range

Applications:
* Wireless
* Transmitter
* Laboratory Test
* Radar

Electrical

Frequency:	1~2GHz
Insertion Loss:	5dB max.
Attenuation Flatness:	±1.5dB max.
Step:	0.5dB
Attenuation Range:	0~63.5dB
Attenuation Accuracy:	±2.5dB max.
VSWR:	1.7 max.
Voltage/Current:	+5V @20mA typ.
Input Power:	+25dBm max.

Mechanical

Size*1:	32*20*12.7mm
	1.26*0.787*0.5in
RF Connectors:	SMA Female
Power Supply & Control Interface Connectors:	J30J-9ZKP
Housing Material:	Aluminium
Mounting:	4-Φ2.7 through-hole
Logic Input:	On: 1(+3.3~+5V)
	Off: 0(0~+0.5V)

[1] Exclude connectors.

Pin Numbering

Pin	Function	Pin	Function
1	C1	6	C6
2	C2	7	C7
3	C3	8	GND
4	C4	9	+5V
5	C5		

Environmental

Operating Temperature:	-40~+85℃
Non-operating Temperature:	-55~+125℃

Outline Drawings

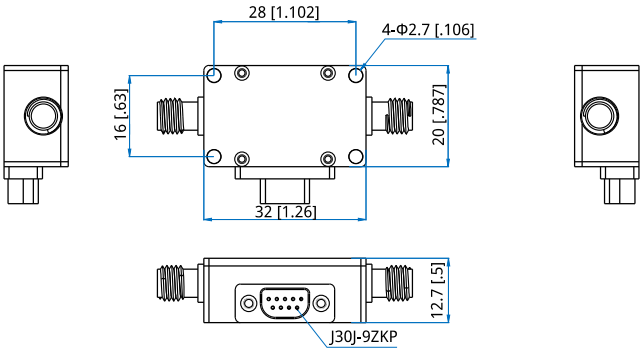

Unit: mm [in]
Tolerance: ±0.2mm [±0.008in]

Logic Table

C1	C2	C3	C4	C5	C6	C7	Attenuation State
1	1	1	1	1	1	1	Reference
0	1	1	1	1	1	1	0.5dB
1	0	1	1	1	1	1	1dB
1	1	0	1	1	1	1	2dB
1	1	1	0	1	1	1	4dB
1	1	1	1	0	1	1	8dB
1	1	1	1	1	0	1	16dB
1	1	1	1	1	1	0	32dB
0	0	0	0	0	0	0	63.5dB

How To Order

NDA-1000-2000-63.5-0.5

Customization is available upon request.

Digital Controlled Attenuator

NDA-1000-2000-63-1

1~2GHz, 63dB, 1dB

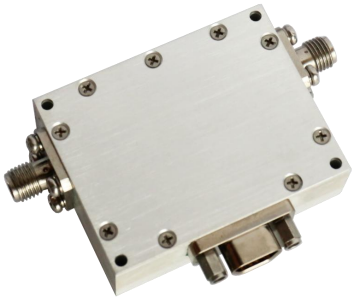

Features:
* Broadband
* High Dynamic Range

Applications:
* Wireless
* Transmitter
* Laboratory Test
* Radar

Electrical

Frequency:	1~2GHz
Insertion Loss:	2.5dB max.
Attenuation Flatness:	±0.5dB max.
Control Bits:	6
Step:	1dB
Attenuation Range:	0~63dB
Attenuation Accuracy:	3% of attenuation setting max.
Switching Time:	100nS max.
Input VSWR:	1.5 max.
Output VSWR:	1.5 max.
Voltage:	±5V DC
Current:	0.1A typ.
Input Power Without Damage:	30dBm max.

Mechanical

Size[*1]:	45*35*15mm 1.772*1.378*0.591in
Weight:	200g typ.
RF Connectors:	SMA Female
Power Supply & Control Interface Connectors:	J30J-9ZKP
Housing Material:	Aluminum
Mounting:	4*Φ2.4mm through-hole

[1] Exclude connectors.

Environmental

Operating Temperature:	-40~+70℃
Non-operating Temperature:	-55~+70℃

Outline Drawings

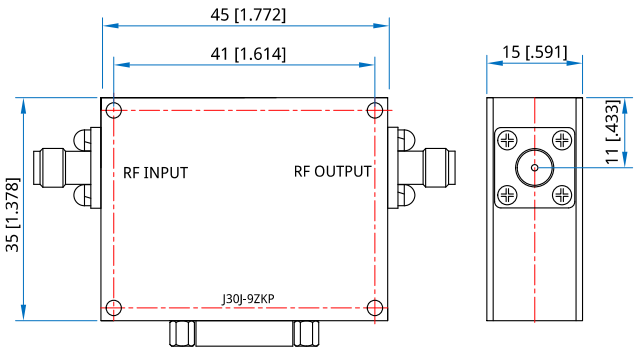

Unit: mm [in]
Tolerance: ±0.2mm [±0.008in]

Pin Numbering

Pin	Function	Pin	Function
1	+5V	6	4dB
2	-5V	7	8dB
3	GND	8	16dB
4	1dB (LSB)	9	32dB (MSB)
5	2dB		

How To Order

NDA-1000-2000-63-1

Customization is available upon request.

Digital Controlled Attenuator

NDA-1000-40000-31-1

1~40GHz, 31dB, 1dB

Features:
* Broadband
* High Dynamic Range

Applications:
* Wireless
* Transmitter
* Laboratory Test
* Radar

Electrical

Frequency:	1~40GHz
Insertion Loss:	8dB typ.
Attenuation Flatness:	±3dB max.
Control Bits:	5
Step:	1dB
Attenuation Range:	0~31dB
Attenuation Accuracy:	±5% of attenuation setting typ.
Input VSWR:	2.0 max.
Output VSWR:	2.0 max.
Voltage:	±5V DC
Current:	0.3A typ.
Input Power Without Damage:	20dBm max.

Mechanical

Size*1:	30*20*8mm 1.181*0.787*0.315in
Weight:	100g typ.
RF Connectors:	2.92mm Female
Power Supply & Control Interface Connectors:	Feed Through/Terminal Post
Housing Material:	Aluminum
Mounting:	3-M2.5 through-hole

[1] Exclude connectors.

Environmental

Operating Temperature:	-20~+60℃
Non-operating Temperature:	-40~+85℃

Outline Drawings

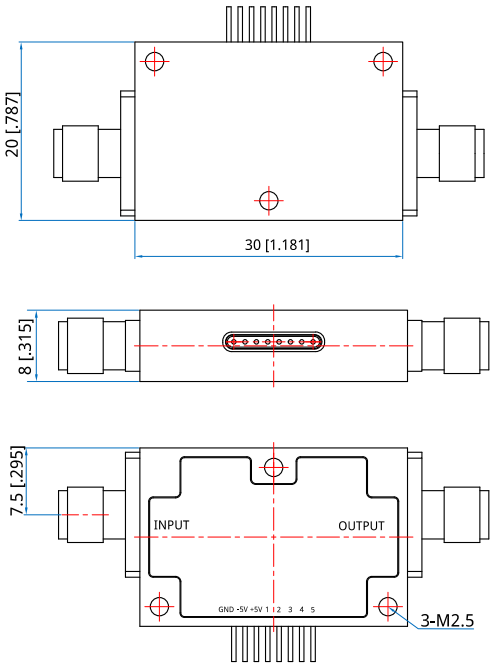

Unit: mm [in]
Tolerance: ±0.2mm [±0.008in]

Pin Numbering

Pin	Function	Pin	Function
1	1dB (LSB)	4	8dB
2	2dB	5	16dB (MSB)
3	4dB		

How To Order

NDA-1000-40000-31-1

Customization is available upon request.

Digital Controlled Attenuator

NDA-1000-40000-63.5-0.5

1~40GHz, 63.5dB, 0.5dB

Features:
* Broadband
* High Dynamic Range

Applications:
* Wireless
* Transmitter
* Laboratory Test
* Radar

Electrical

Frequency:	1~40GHz
Insertion Loss:	11.5dB max.
Attenuation Flatness:	±1dB typ .@20dB
	±2dB typ. @40dB
	±3dB typ. @63.5dB
Step:	0.5dB
Attenuation Range:	0~63.5dB
Attenuation Accuracy:	±2dB typ.@0-63.5dB
VSWR:	1.7 max. @0.5~18GHz
	2.0 max. @18~40GHz
Voltage/Current:	±3.3V @30mA Max.
Input Power:	+25dBm max.

Mechanical

Size[*1]:	34*18*12mm
	1.339*0.709*0.472in
Switching Time:	200 ns
RF Connectors:	SMA Female
Power Supply & Control Interface Connectors:	J30J-15ZKP
Mounting:	4-Φ2.7 through-hole
Logic Input:	On: 1(+1.2~3.3V)
	Off: 0(0~0.8V)

[1] Exclude connectors.

Pin Numbering

Pin	Function	Pin	Function
1	+3.3V	7	C4
2	COM	8	C5
3	-3.3V	9	C6
4	C1	10	C7
5	C2	11-15	NC
6	C3		

Environmental

Operating Temperature:	-45~+85℃
Non-operating Temperature:	-55~+125℃

Outline Drawings

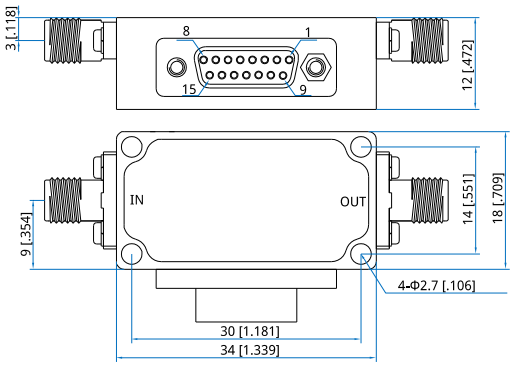

Unit: mm [in]
Tolerance: ±0.2mm [±0.008in]

Logic Table

State	C1	C2	C3	C4	C5	C6	C7	Att. 63.5dB
-	0	0	0	0	0	0	0	Reference IL
1	1	0	0	0	0	0	0	0.5dB
2	0	1	0	0	0	0	0	1dB
3	0	0	1	0	0	0	0	2dB
4	0	0	0	1	0	0	0	4dB
5	0	0	0	0	1	0	0	8dB
6	0	0	0	0	0	1	0	16dB
7	0	0	0	0	0	0	1	32dB
8	1	1	1	1	1	1	1	63.5dB

How To Order

NDA-1000-40000-63.5-0.5

Customization is available upon request.

Digital Controlled Attenuator

NDA-100-18000-31.5-0.5

0.1~18GHz, 31.5dB, 0.5dB

Features:
* Broadband
* High Dynamic Range

Applications:
* Wireless
* Transmitter
* Laboratory Test
* Radar

Electrical

Frequency:	0.1~18GHz
Insertion Loss:	5.5dB max.
Attenuation Flatness:	±0.7dB typ. @0.5~16dB
	±1dB typ. @17.5~31.5dB
Step:	0.5dB
Attenuation Range:	0~31.5dB
Attenuation Accuracy:	±0.8dB typ. @0.5~16dB
	±1dB typ. @17.5~31.5dB
VSWR:	2 max.
Voltage/Current:	-5V @15mA typ.
Input Power:	+25dBm max.

Mechanical

Size[*1]:	32*20*12.7mm
	1.26*0.787*0.5in
RF Connectors:	SMA Female
Power Supply & Control Interface Connectors:	J30J-15ZKP
Mounting:	4-Φ2.7mm through-hole
Logic Input:	On: 1(+3~+5V)
	Off: 0(0~+0.5V)

[1] Exclude connectors.

Pin Numbering

Pin	Function	Pin	Function
1	-5V	7	C4:-4dB
2	GND	8	C5:-8dB
3	NC	9	C6:-16dB
4	C1:-0.5dB	10	NC
5	C2:-1dB	11~15	NC
6	C3:-2dB		

Environmental

Operating Temperature:	-45~+85°C
Non-operating Temperature:	-55~+125°C

Outline Drawings

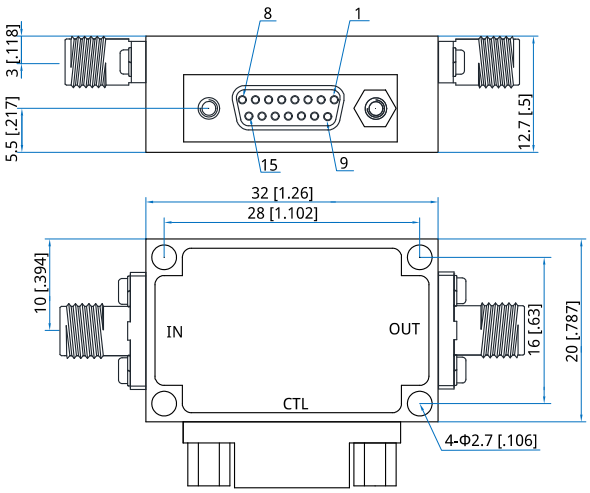

Unit: mm [in]
Tolerance: ±0.2mm [±0.008in]

Logic Table

State	C1	C2	C3	C4	C5	C6	Attenuation State
-	0	0	0	0	0	0	Reference IL
1	1	0	0	0	0	0	0.5dB
2	0	1	0	0	0	0	1dB
3	0	0	1	0	0	0	2dB
4	0	0	0	1	0	0	4dB
5	0	0	0	0	1	0	8dB
6	0	0	0	0	0	1	16dB
7	1	1	1	1	1	1	31.5dB

How To Order

NDA-100-18000-31.5-0.5

Customization is available upon request.

Digital Controlled Attenuator

NDA-100-40000-31.5-0.5

0.1~40GHz, 31.5dB, 0.5dB

Features:
* Broadband
* High Dynamic Range

Applications:
* Wireless
* Transmitter
* Laboratory Test
* Radar

Electrical

Frequency:	0.1~40GHz
Insertion Loss:	7dB max.
Attenuation Flatness:	±1.2dB typ. @15dB
	±2dB typ. @31.5dB
Step:	0.5dB
Attenuation Range:	0~31.5dB
Attenuation Accuracy:	±1.2dB typ. @0.5~15dB
	±2dB typ. @15~31.5dB
VSWR:	1.6 max. @0.1-15GHz
	2 max.@15-40GHz
Voltage/Current:	+3.3V @20mA Max.
	-3.3V @20mA Max.
Input Power:	+25dBm max.

Mechanical

Size[*1]:	34*18*12mm
	1.339*0.709*0.472in
RF Connectors:	2.92mm Female
Power Supply & Control Interface Connectors:	MicroD15-Female
Mounting:	4-Φ2.7 through-hole
Logic Input:	On: 1(+1.2~+3.3V)
	Off: 0(0~+0.8V)

[1] Exclude connectors.

Pin Numbering

Pin	Function	Pin	Function
1	+3.3V	6	C3
2	GND	7	C4
3	-3.3V	8	C5
4	C1	9	C6
5	C2	10~15	NC

Environmental

Operating Temperature:	-45~+85°C
Non-operating Temperature:	-55~+125°C

Outline Drawings

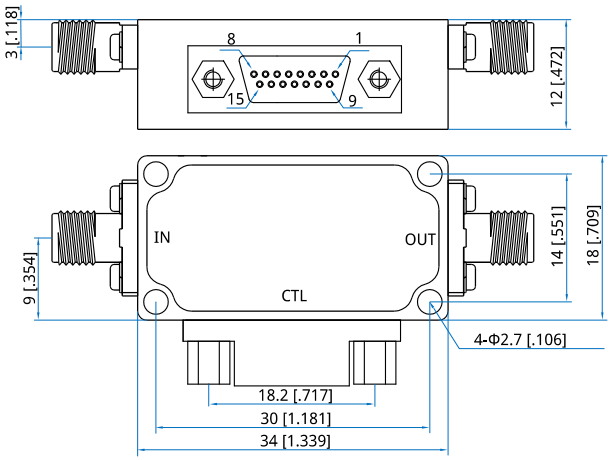

Unit: mm [in]
Tolerance: ±0.2mm [±0.008in]

Logic Table

State	C1	C2	C3	C4	C5	C6	Attenuation State
-	0	0	0	0	0	0	Reference IL
1	1	0	0	0	0	0	0.5dB
2	0	1	0	0	0	0	1dB
3	0	0	1	0	0	0	2dB
4	0	0	0	1	0	0	4dB
5	0	0	0	0	1	0	8dB
6	0	0	0	0	0	1	16dB
7	1	1	1	1	1	1	31.5dB

How To Order

NDA-100-40000-31.5-0.5

Customization is available upon request.

Digital Controlled Attenuator

NDA-10-13000-40-10

10MHz~13GHz, 40dB, 10dB

Features:
* Broadband
* High Dynamic Range

Applications:
* Wireless
* Transmitter
* Laboratory Test
* Radar

Electrical

Frequency:	0.01~13GHz
Insertion Loss:	7dB max.
Attenuation Flatness:	±1dB max.
Control Bits:	4
Step:	10dB
Attenuation Range:	0~40dB
Attenuation Accuracy:	3% of attenuation setting max.
Switching Time:	100nS max.
Input VSWR:	1.5 max.
Output VSWR:	1.5 max.
Voltage:	±5V DC
Current:	0.1A typ.
Input Power Without Damage:	37dBm max.

Mechanical

Size[*1]:	45*35*15mm 1.772*1.378*0.591in
Weight:	200g typ.
RF Connectors:	SMA Female
Power Supply & Control Interface Connectors:	J30J-9ZKP
Housing Material:	Aluminum
Mounting:	4-Φ2.8mm through-hole

[1] Exclude connectors.

Environmental

Operating Temperature:	-40~+70℃
Non-operating Temperature:	-55~+70℃

Outline Drawings

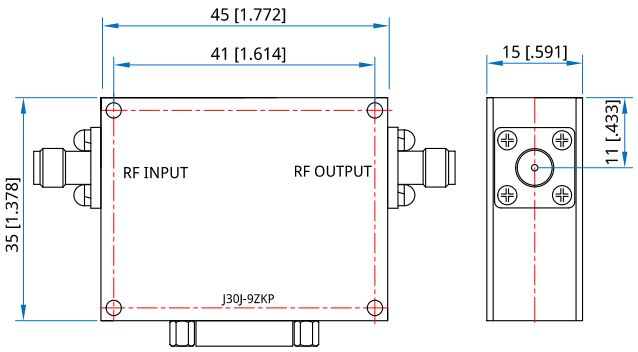

Unit: mm [in]
Tolerance: ±0.2mm [±0.008in]

Pin Numbering

Pin	Function	Pin	Function
1	+5V	6	30dB
2	-5V	7	40dB
3	GND	8	NC
4	10dB	9	NC
5	20dB		

How To Order

NDA-10-13000-40-10

Customization is available upon request.

Digital Controlled Attenuator

NDA-108-400-31-1

0.108~0.4GHz, 31dB, 1dB

Features:
* Broadband
* High Dynamic Range

Applications:
* Wireless
* Transmitter
* Laboratory Test
* Radar

Electrical

Frequency:	0.108~0.4GHz
Insertion Loss:	2.5dB max.
Attenuation Flatness:	±1dB max.
Digital Control:	5Bit TTL
Step:	1dB
Attenuation Range:	0~31dB
Attenuation Accuracy:	3% of attenuation setting max.
Switching Time:	500nS max.
Input VSWR:	2 typ.
Output VSWR:	2 typ.
Voltage/Current:	+28V DC/0.3A +5V DC/0.6A
Input Power:	42dBm max.

Mechanical

Size[*1]:	75*55*16mm 2.953*2.165*0.630in
RF Connectors:	SMA Female
Power Supply & Control Interface Connectors:	J30J-9ZKP
Mounting:	4-Φ2.6mm through-hole

[1] Exclude connectors.

Environmental

Operating Temperature:	-40~+70°C
Non-operating Temperature:	-55~+85°C

Outline Drawings

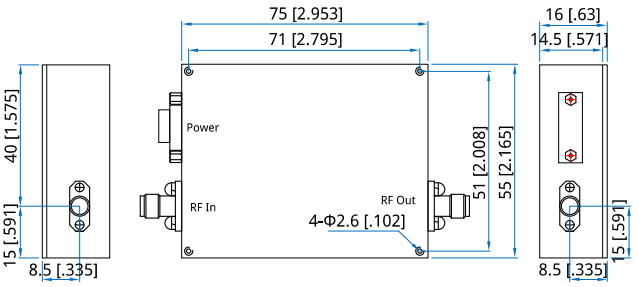

Unit: mm [in]
Tolerance: ±0.2mm [±0.008in]

Pin Numbering

Pin	Function	Pin	Function
1	1dB	6	NC
2	2dB	7	+28V
3	4dB	8	+5V
4	8dB	9	GND
5	16dB		

How To Order

NDA-108-400-31-1

Customization is available upon request.

Digital Controlled Attenuator

NDA-18000-26000-47.5-0.5

18~26GHz, 47.5dB, 0.5dB

Features:
* Broadband
* High Dynamic Range

Applications:
* Wireless
* Transmitter
* Laboratory Test
* Radar

Electrical

Frequency:	18~26GHz
Insertion Loss:	9dB max.
Attenuation Flatness:	±2dB max.
Control Bits:	8
Step:	0.5dB
Attenuation Range:	0 ~ 47.5dB
Attenuation Accuracy:	3% of attenuation setting max.
Switching Time:	100nS max.
VSWR:	2.5 max. @Attenuation 0dB
Voltage:	+5V/-5V DC
Current:	0.1A typ.
Input Power:	27dBm max.

Mechanical

Size[*1]:	38*20*12mm 1.496*0.787*0.472in
RF Connectors:	SMA female
Power Supply & Control Interface Connectors:	J30J-15ZKP
Mounting:	4-Φ2.7mm through-hole

[1] Exclude connectors.

Environmental

Operating Temperature:	-40~+70℃
Non-operating Temperature:	-55~+70℃

Outline Drawings

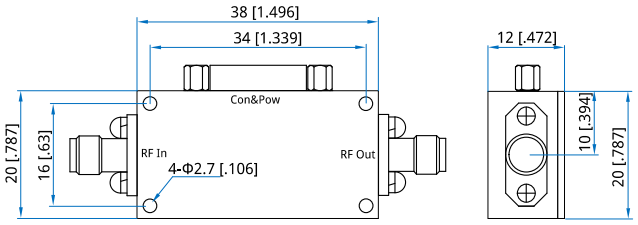

Unit: mm [in]
Tolerance: ±0.2mm [±0.008in]

Pin Numbering

Pin	Function	Pin	Function
1	+5V	7	4dB
2	-5V	8	8dB
3	GND	9	16dB
4	0.5dB	10	16dB
5	1dB	11~14	NC
6	2dB	15	GND

How To Order

NDA-18000-26000-47.5-0.5

Customization is available upon request.

Digital Controlled Attenuator

NDA-18000-40000-31.5-0.5

18~40GHz, 31.5dB, 0.5dB

Features:
* Broadband
* High Dynamic Range

Applications:
* Wireless
* Transmitter
* Laboratory Test
* Radar

Electrical

Frequency:	18~40GHz
Insertion Loss:	8dB typ.
Attenuation Flatness:	±3dB max.
Control Bits:	6
Step:	0.5dB
Attenuation Range:	0~31.5dB
Attenuation Accuracy:	±6% of attenuation setting max.
Switching Time:	500nS max.
Input VSWR:	2.5 max.
Output VSWR:	2.5 max.
Voltage:	±5V DC
Current:	0.1A typ.
Input Power Without Damage:	27dBm max.

Mechanical

Size[*1]:	40*25*11mm 1.575*0.984*0.433in
Weight:	66g typ.
RF Connectors:	2.92mm Female
Power Supply & Control Interface Connectors:	J30J-9ZKP
Housing Material:	Aluminum
Mounting:	4-Φ2.8mm through-hole

[1] Exclude connectors.

Environmental

Operating Temperature:	-40~+60℃
Non-operating Temperature:	-55~+70℃

Outline Drawings

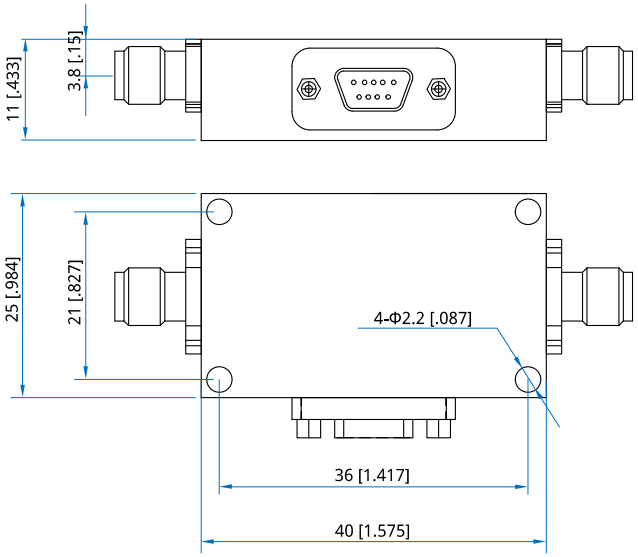

Unit: mm [in]
Tolerance: ±0.2mm [±0.008in]

Pin Numbering

Pin	Function	Pin	Function
1	0.5dB (LSB)	6	16dB (MSB)
2	1dB	7	-5V
3	2dB	8	+5V
4	4dB	9	GND
5	8dB		

How To Order

NDA-18000-40000-31.5-0.5

Customization is available upon request.

Digital Controlled Attenuator

NDA-2000-10000-60-0.1

2~10GHz, 60dB, 0.1dB

Features:
* Broadband
* High Dynamic Range

Applications:
* Wireless
* Transmitter
* Laboratory Test
* Radar

Electrical

Frequency:	2~10GHz
Insertion Loss:	7dB max.
Attenuation Flatness:	±2dB max.
Digital Control:	Serialized Control
Step:	0.1dB
Attenuation Range:	0~60dB
Input VSWR:	2 max.
Output VSWR:	2 max.
Voltage:	±5V
Current:	0.1A typ.
Input Power Without Damage:	25dBm max.

Mechanical

Size[*1]:	40*35*15mm 1.575*1.378*0.591in
RF Connectors:	SMA Female
Power Supply & Control Interface Connectors:	J30J-9ZKP
Housing Material:	Aluminum

[1] Exclude connectors.

Environmental

Operating Temperature:	-40~+70℃
Non-operating Temperature:	-55~+70℃

Outline Drawings

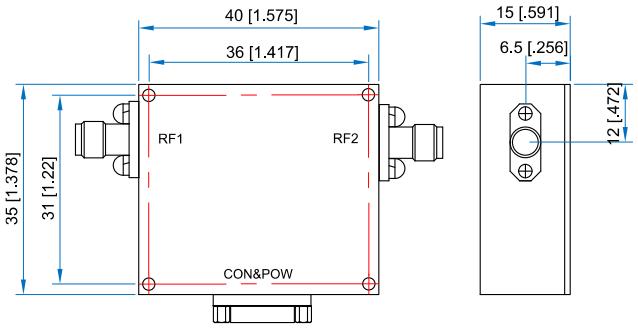

Unit: mm [in]
Tolerance: ±0.2mm [±0.008in]

Pin Numbering

Pin	Function	Pin	Function
1	+5V	6	EN
2	-5V	7	NC
3	GND	8	NC
4	CLK (LSB)	9	DGND
5	DATA		

How To Order

NDA-2000-10000-60-0.1

Customization is available upon request.

Digital Controlled Attenuator

NDA-2000-18000-15-1

2~18GHz, 15dB, 1dB

Features:
* Broadband
* High Dynamic Range

Applications:
* Wireless
* Transmitter
* Laboratory Test
* Radar

Electrical

Frequency:	2~18GHz
Insertion Loss:	7dB max.
Attenuation Flatness:	±3.5dB max.
Control Bits:	4
Step:	1dB
Attenuation Range:	0~15dB
Attenuation Accuracy:	±4% of attenuation setting max.
Switching Time:	500nS max.
Input VSWR:	2.2 max.
Output VSWR:	2.2 max.
Voltage:	-5V
Current:	0.1A typ.
Input Power Without Damage:	20dBm

Mechanical

Size*1:	38*20*12mm 1.496*0.787*0.472in
RF Connectors:	SMA Female
Power Supply & Control Interface Connectors:	J30J-9ZKP
Housing Material:	Aluminum
Mounting:	4-Φ2.8mm through-hole

[1] Exclude connectors.

Environmental

Operating Temperature:	-40~+60℃
Non-operating Temperature:	-55~+70℃

Outline Drawings

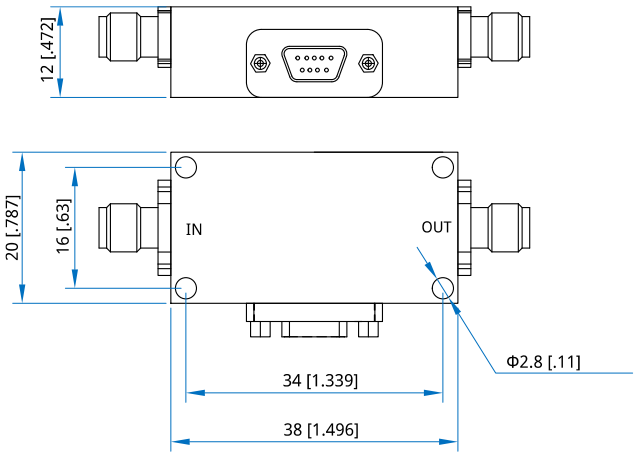

Unit: mm [in]
Tolerance: ±0.2mm [±0.008in]

Pin Numbering

Pin	Function	Pin	Function
1	NC	6	2dB
2	-5V	7	4dB
3~4	GND	8	8dB (MSB)
5	1dB (LSB)	9	NC

How To Order

NDA-2000-18000-15-1

Customization is available upon request.

Digital Controlled Attenuator

NDA-2000-18000-31.5-0.5

2~18GHz, 31.5dB, 0.5dB

Features:
* Broadband
* High Dynamic Range

Applications:
* Wireless
* Transmitter
* Laboratory Test
* Radar

Electrical

Frequency:	2~18GHz
Insertion Loss:	5.5dB max.
Attenuation Flatness:	±0.7dB typ. @0.5~16dB
	±1dB typ. @17.5~31.5dB
Step:	0.5dB
Attenuation Range:	0~31.5dB
Attenuation Accuracy:	±0.8dB typ. @0.5~16dB
	±1dB typ. @17.5~31.5dB
VSWR:	2 max.
Voltage/Current:	-5V @15mA typ.
Input Power:	+25dBm max.

Mechanical

Size[*1]:	32*20*12.7mm
	1.26*0.787*0.5in
RF Connectors:	SMA Female
Power Supply & Control Interface Connectors:	J30J-15ZKP
Mounting:	4-Φ2.7mm through-hole
Logic Input:	On: 1(+3~+5V)
	Off: 0(0~+0.5V)

[1] Exclude connectors.

Pin Numbering

Pin	Function	Pin	Function
1	-5V	7	C4:-4dB
2	GND	8	C5:-8dB
3	NC	9	C6:-16dB
4	C1:-0.5dB	10	NC
5	C2:-1dB	11~15	NC
6	C3:-2dB		

Environmental

Operating Temperature:	-45~+85°C
Non-operating Temperature:	-55~+125°C

Outline Drawings

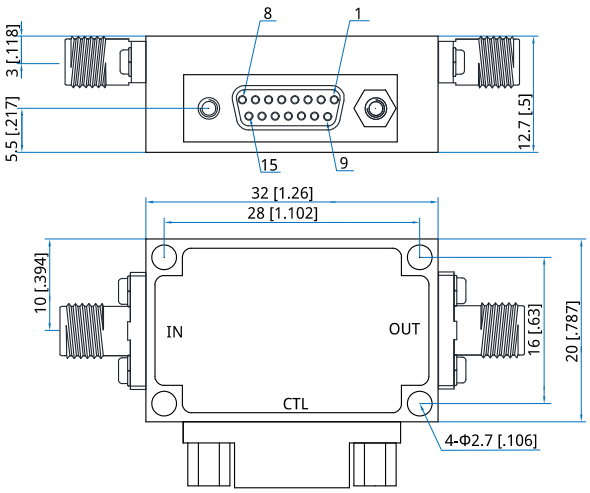

Unit: mm [in]
Tolerance: ±0.2mm [±0.008in]

Logic Table

State	C1	C2	C3	C4	C5	C6	Attenuation State
-	0	0	0	0	0	0	Reference IL
1	1	0	0	0	0	0	0.5dB
2	0	1	0	0	0	0	1dB
3	0	0	1	0	0	0	2dB
4	0	0	0	1	0	0	4dB
5	0	0	0	0	1	0	8dB
6	0	0	0	0	0	1	16dB
7	1	1	1	1	1	1	31.5dB

How To Order

NDA-2000-18000-31.5-0.5

Customization is available upon request.

Digital Controlled Attenuator

NDA-2000-18000-60-0.1

2~18GHz, 60dB, 0.1dB

Features:
* Broadband
* High Dynamic Range

Applications:
* Wireless
* Transmitter
* Laboratory Test
* Radar

Electrical

Frequency:	2~18GHz
Insertion Loss:	6dB typ.
Attenuation Range:	0~60dB
Step:	0.1dB
Control Bit:	10 Bits
Attenuation Accuracy:	±5% typ of attenuation setting
VSWR:	2 max.
Voltage:	±5V DC
Input Power:	+20dBm max.
Impedance:	50Ω
Control:	TTL High: On TTL Low/NC: Off

Mechanical

Size[*1]:	60*45*15mm 2.362*1.772*0.591in
RF Connectors:	SMA Female
Mounting:	4-Φ2.7mm through-hole

[1] Exclude connectors.

Environmental

Operating Temperature:	-20~+50℃
Non-operating Temperature:	-40~+70℃

Outline Drawings

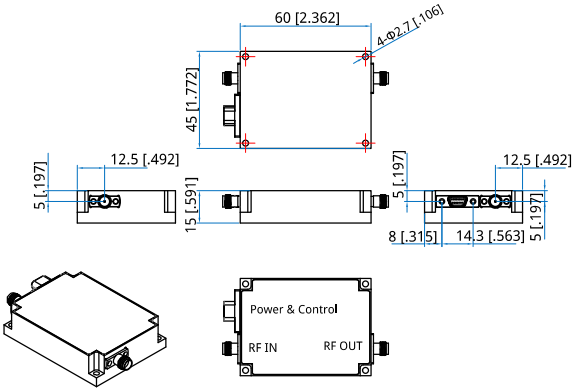

Unit: mm [in]

Tolerance: ±0.2mm [±0.008in]

How To Order

NDA-2000-18000-60-0.1

Customization is available upon request.

Digital Controlled Attenuator

NDA-2000-18000-60-10

2~18GHz, 60dB, 10dB

Features:
* Broadband
* High Dynamic Range

Applications:
* Wireless
* Transmitter
* Laboratory Test
* Radar

Electrical

Frequency:	2~18GHz
Insertion Loss:	14dB max.
Attenuation Flatness:	±3.5dB max.
Control Bits:	3
Step:	10dB
Attenuation Range:	0~60dB
Attenuation Accuracy:	±4% of attenuation setting max.
Switching Time:	500nS max.
Input VSWR:	2.2 max.
Output VSWR:	2.2 max.
Voltage:	-5V
Current:	0.1A typ.
Input Power Without Damage:	20dBm

Mechanical

Size*1:	38*20*12mm 1.496*0.787*0.472in
RF Connectors:	SMA Female
Power Supply & Control Interface Connectors:	J30J-9ZKP
Housing Material:	Aluminum
Mounting:	4-Φ2.8mm through-hole

[1] Exclude connectors.

Environmental

Operating Temperature:	-40~+60℃
Non-operating Temperature:	-55~+70℃

Outline Drawings

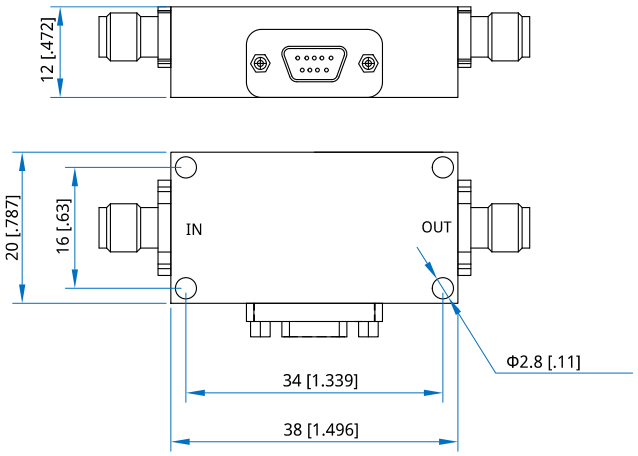

Unit: mm [in]
Tolerance: ±0.2mm [±0.008in]

Pin Numbering

Pin	Function	Pin	Function
1	NC	6	20dB
2	-5V	7	30dB (MSB)
3~4	GND	8 ~ 9	NC
5	10dB (LSB)		

How To Order

NDA-2000-18000-60-10

Customization is available upon request.

Digital Controlled Attenuator

NDA-2000-40000-31.5-0.5

2~40GHz, 31.5dB, 0.5dB

Features:
* Broadband
* High Dynamic Range

Applications:
* Wireless
* Transmitter
* Laboratory Test
* Radar

Electrical

Frequency:	2~40GHz
Insertion Loss:	7dB max.
Attenuation Flatness:	±1.2dB typ.@15dB
	±2dB typ.@31.5dB
Step:	0.5dB
Attenuation Range:	0~31.5dB
Attenuation Accuracy:	±1.2dB typ.@0.5-15dB
	±2dB typ.@15-31.5dB
VSWR:	1.6 max. @0.1~15GHz
	2.0 max. @15~40GHz
Voltage/Current:	+3.3V @20mA Max.
	-3.3V @20mA Max.
Input Power:	+25dBm max.

Mechanical

Size*1:	34*18*12mm
	1.339*0.709*0.472in
Swiching Time:	1us
RF Connectors:	2.92 Female
Power Supply & Control Interface Connectors:	J30J-15ZKP
Mounting:	4-Φ2.7 through-hole
Logic Input:	On: 1(+1.2~3.3V)
	Off: 0(0~0.8V)

[1] Exclude connectors.

Pin Numbering

Pin	Function	Pin	Function
1	+3.3V	6	C3
2	COM	7	C4
3	-3.3V	8	C5
4	C1	9	C6
5	C2	10-15	NC

Environmental

Operating Temperature:	-45~+85℃
Non-operating Temperature:	-55~+125℃

Outline Drawings

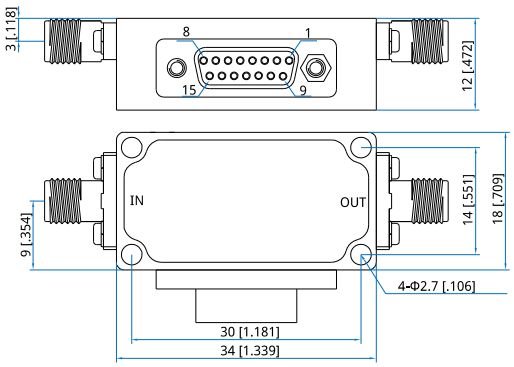

Unit: mm [in]
Tolerance: ±0.2mm [±0.008in]

Logic Table

State	C1	C2	C3	C4	C5	C6	Att.
-	0	0	0	0	0	0	31.5dB Reference IL
1	1	0	0	0	0	0	0.5dB
2	0	1	0	0	0	0	1dB
3	0	0	1	0	0	0	2dB
4	0	0	0	1	0	0	4dB
5	0	0	0	0	1	0	8dB
6	0	0	0	0	0	1	16dB
7	1	1	1	1	1	1	31.5dB

How To Order

NDA-2000-40000-31.5-0.5

Customization is available upon request.

Digital Controlled Attenuator

NDA-2000-4000-31.5-0.5

2~4GHz, 31.5dB, 0.5dB

Features:
* Broadband
* High Dynamic Range

Applications:
* Wireless
* Transmitter
* Laboratory Test
* Radar

Electrical

Frequency:	2~4GHz
Insertion Loss:	3.8dB max.
Attenuation Flatness:	±0.4dB typ. @0.5~16dB
	±0.5dB typ. @17.5~31.5dB
Step:	0.5dB
Attenuation Range:	0~31.5dB
Attenuation Accuracy:	±0.5dB typ. @0.5~16dB
	±0.5dB typ. @17.5~31.5dB
VSWR:	1.8 max.
Voltage/Current:	-5V @15mA typ.
Input Power:	+25dBm max.

Mechanical

Size[*1]:	32*20*12.7mm
	1.26*0.787*0.5in
RF Connectors:	SMA Female
Power Supply & Control Interface Connectors:	J30J-15ZKP
Mounting:	4-Φ2.7mm through-hole
Logic Input:	On: 1(+3~+5V)
	Off: 0(0~+0.5V)

[1] Exclude connectors.

Pin Numbering

Pin	Function	Pin	Function
1	-5V	7	C4:-4dB
2	GND	8	C5:-8dB
3	NC	9	C6:-16dB
4	C1:-0.5dB	10	NC
5	C2:-1dB	11~15	NC
6	C3:-2dB		

Environmental

Operating Temperature:	-45~+85°C
Non-operating Temperature:	-55~+125°C

Outline Drawings

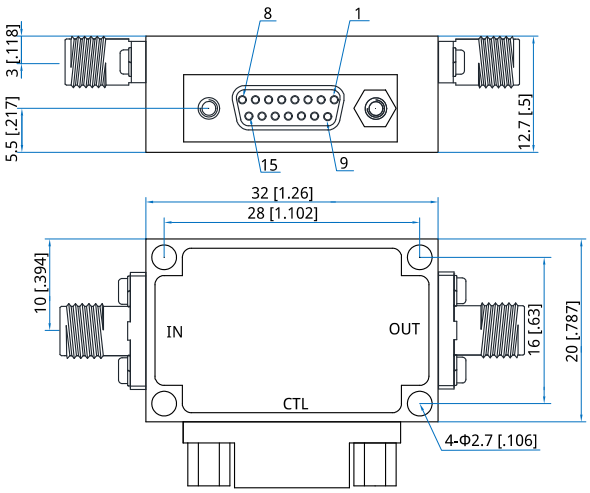

Unit: mm [in]
Tolerance: ±0.2mm [±0.008in]

Logic Table

State	C1	C2	C3	C4	C5	C6	Attenuation State
-	0	0	0	0	0	0	Reference IL
1	1	0	0	0	0	0	0.5dB
2	0	1	0	0	0	0	1dB
3	0	0	1	0	0	0	2dB
4	0	0	0	1	0	0	4dB
5	0	0	0	0	1	0	8dB
6	0	0	0	0	0	1	16dB
7	1	1	1	1	1	1	31.5dB

How To Order

NDA-2000-4000-31.5-0.5

Customization is available upon request.

Digital Controlled Attenuator

NDA-20-18000-31.5-0.5

0.02~18GHz, 31.5dB, 0.5dB

Features:
* Broadband
* High Dynamic Range

Applications:
* Wireless
* Transmitter
* Laboratory Test
* Radar

Electrical

Frequency:	0.02~18GHz
Insertion Loss:	5.5dB max.
Attenuation Flatness:	±0.7dB typ. @0.5~16dB
	±1dB typ. @17.5~31.5dB
Step:	0.5dB
Attenuation Range:	0~31.5dB
Attenuation Accuracy:	±0.8dB typ. @0.5~16dB
	±1dB typ. @17.5~31.5dB
VSWR:	2 max.
Voltage/Current:	-5V @15mA typ.
Input Power:	+25dBm max.

Mechanical

Size[*1]:	32*20*12.7mm
	1.26*0.787*0.5in
RF Connectors:	SMA Female
Power Supply & Control Interface Connectors:	J30J-15ZKP
Mounting:	4-Φ2.7mm through-hole
Logic Input:	On: 1(+3~+5V)
	Off: 0(0~+0.5V)

[1] Exclude connectors.

Pin Numbering

Pin	Function	Pin	Function
1	-5V	7	C4:-4dB
2	GND	8	C5:-8dB
3	NC	9	C6:-16dB
4	C1:-0.5dB	10	NC
5	C2:-1dB	11~15	NC
6	C3:-2dB		

Environmental

Operating Temperature:	-45~+85°C
Non-operating Temperature:	-55~+125°C

Outline Drawings

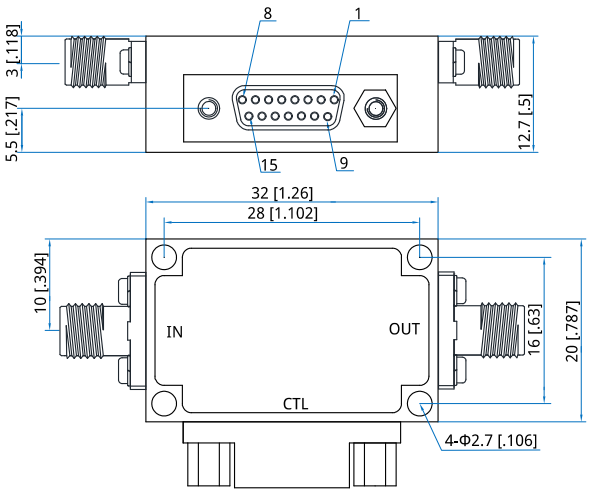

Unit: mm [in]
Tolerance: ±0.2mm [±0.008in]

Logic Table

State	C1	C2	C3	C4	C5	C6	Attenuation State
-	0	0	0	0	0	0	Reference IL
1	1	0	0	0	0	0	0.5dB
2	0	1	0	0	0	0	1dB
3	0	0	1	0	0	0	2dB
4	0	0	0	1	0	0	4dB
5	0	0	0	0	1	0	8dB
6	0	0	0	0	0	1	16dB
7	1	1	1	1	1	1	31.5dB

How To Order

NDA-20-18000-31.5-0.5

Customization is available upon request.

Digital Controlled Attenuator

NDA-20-20000-31.5-0.5

0.02~20GHz, 31.5dB, 0.5dB

Features:
* Broadband
* High Dynamic Range

Applications:
* Wireless
* Transmitter
* Laboratory Test
* Radar

Electrical

Frequency:	0.02~20GHz
Insertion Loss:	6dB max.
Attenuation Flatness:	±0.7dB typ. @0.5~16dB
	±1dB typ. @17.5~31.5dB
Step:	0.5dB
Attenuation Range:	0~31.5dB
Attenuation Accuracy:	±0.8dB typ. @0.5~16dB
	±1dB typ. @17.5~31.5dB
VSWR:	2 max.
Voltage/Current:	-5V @15mA typ.
Input Power:	+25dBm max.

Mechanical

Size[*1]:	32*20*12.7mm
	1.26*0.787*0.5in
RF Connectors:	SMA Female
Power Supply & Control Interface Connectors:	J30J-15ZKP
Mounting:	4-Φ2.7mm through-hole
Logic Input:	On: 1(+3~+5V)
	Off: 0(0~+0.5V)

[1] Exclude connectors.

Pin Numbering

Pin	Function	Pin	Function
1	-5V	7	C4:-4dB
2	GND	8	C5:-8dB
3	NC	9	C6:-16dB
4	C1:-0.5dB	10	NC
5	C2:-1dB	11~15	NC
6	C3:-2dB		

Environmental

Operating Temperature:	-45~+85°C
Non-operating Temperature:	-55~+125°C

Outline Drawings

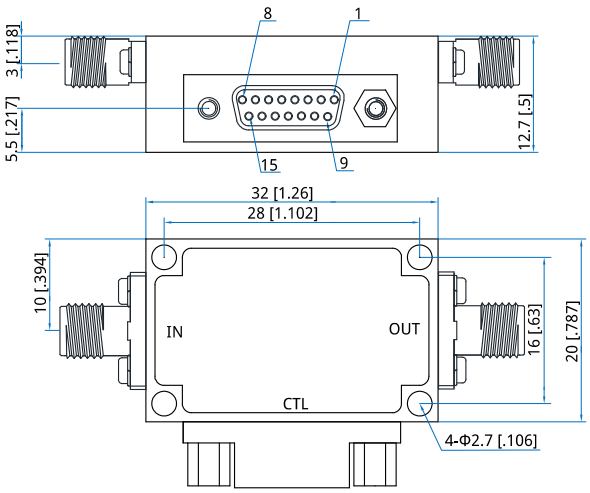

Unit: mm [in]
Tolerance: ±0.2mm [±0.008in]

Logic Table

State	C1	C2	C3	C4	C5	C6	Attenuation State
-	0	0	0	0	0	0	Reference IL
1	1	0	0	0	0	0	0.5dB
2	0	1	0	0	0	0	1dB
3	0	0	1	0	0	0	2dB
4	0	0	0	1	0	0	4dB
5	0	0	0	0	1	0	8dB
6	0	0	0	0	0	1	16dB
7	1	1	1	1	1	1	31.5dB

How To Order

NDA-20-20000-31.5-0.5

Customization is available upon request.

Digital Controlled Attenuator

NDA-20-6000-31.5-0.5

0.02~6GHz, 31.5dB, 0.5dB

Features:
* Broadband
* High Dynamic Range

Applications:
* Wireless
* Transmitter
* Laboratory Test
* Radar

Electrical

Frequency:	0.02~6GHz
Insertion Loss:	4dB max.
Attenuation Flatness:	±0.4dB typ. @0.5~16dB
	±0.5dB typ. @17.5~31.5dB
Step:	0.5dB
Attenuation Range:	0~31.5dB
Attenuation Accuracy:	±0.5dB typ. @0.5~16dB
	±0.5dB typ. @17.5~31.5dB
VSWR:	1.8 max.
Voltage/Current:	-5V @15mA typ.
Input Power:	+25dBm max.

Mechanical

Size[*1]:	32*20*12.7mm
	1.26*0.787*0.5in
RF Connectors:	SMA Female
Power Supply & Control Interface Connectors:	J30J-15ZKP
Mounting:	4-Φ2.7mm through-hole
Logic Input:	On: 1(+3~+5V)
	Off: 0(0~+0.5V)

[1] Exclude connectors.

Pin Numbering

Pin	Function	Pin	Function
1	-5V	7	C4:-4dB
2	GND	8	C5:-8dB
3	NC	9	C6:-16dB
4	C1:-0.5dB	10	NC
5	C2:-1dB	11~15	NC
6	C3:-2dB		

Environmental

Operating Temperature:	-45~+85°C
Non-operating Temperature:	-55~+125°C

Outline Drawings

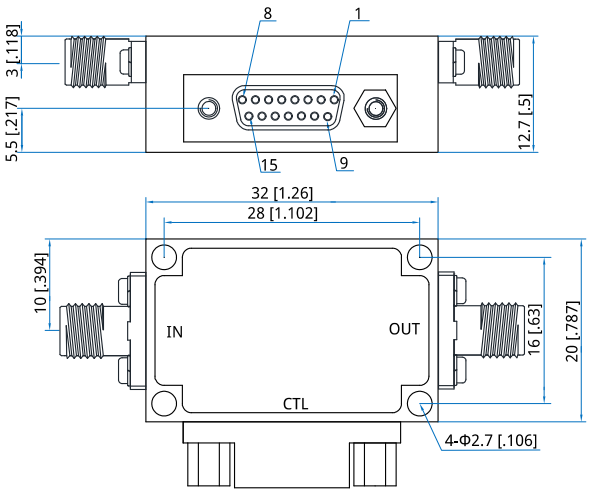

Unit: mm [in]
Tolerance: ±0.2mm [±0.008in]

Logic Table

State	C1	C2	C3	C4	C5	C6	Attenuation State
-	0	0	0	0	0	0	Reference IL
1	1	0	0	0	0	0	0.5dB
2	0	1	0	0	0	0	1dB
3	0	0	1	0	0	0	2dB
4	0	0	0	1	0	0	4dB
5	0	0	0	0	1	0	8dB
6	0	0	0	0	0	1	16dB
7	1	1	1	1	1	1	31.5dB

How To Order

NDA-20-6000-31.5-0.5

Customization is available upon request.

Digital Controlled Attenuator

NDA-26000-40000-51.5-0.5

26~40GHz, 51.5dB, 0.5dB

Features:
* Broadband
* High Dynamic Range

Applications:
* Wireless
* Transmitter
* Laboratory Test
* Radar

Electrical

Frequency:	26~40GHz
Insertion Loss:	15dB max.
Attenuation Flatness:	±2dB max.
Control Bits:	7
Step:	0.5dB
Attenuation Range:	0~51.5dB
Attenuation Accuracy:	5% of attenuation setting max.
Switching Time:	100nS max.
VSWR:	2.5 max. @Attenuation 0dB
Voltage:	+5V/-5V DC
Current:	0.1A typ.
Input Power:	27dBm max.

Mechanical

Size[*1]:	38*20*12mm 1.496*0.787*0.472in
RF Connectors:	2.92mm female
Power Supply & Control Interface Connectors:	J30J-15ZKP
Mounting:	4-Φ2.7mm through-hole

[1] Exclude connectors.

Environmental

Operating Temperature:	-40~+70℃
Non-operating Temperature:	-55~+70℃

Outline Drawings

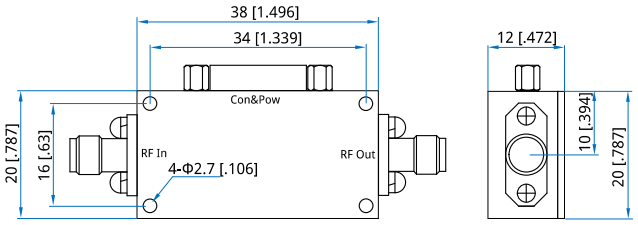

Unit: mm [in]
Tolerance: ±0.2mm [±0.008in]

Pin Numbering

Pin	Function	Pin	Function
1	+5V	7	4dB
2	-5V	8	8dB
3	GND	9	16dB
4	0.5dB	10	20dB
5	1dB	11~14	NC
6	2dB	15	GND

How To Order

NDA-26000-40000-51.5-0.5

Customization is available upon request.

Digital Controlled Attenuator

NDA-30000-40000-30-0.5

30~40GHz, 30dB, 0.5dB

Features:
* Broadband
* High Dynamic Range

Applications:
* Wireless
* Transmitter
* Laboratory Test
* Radar

Electrical

Frequency:	30~40GHz
Insertion Loss:	5.5dB typ.
Attenuation Range:	0~30dB
Step:	0.5dB
Attenuation Accuracy:	3~5% of attenuation setting typ.
VSWR:	1.5 typ.
Voltage:	-5V DC
Control:	TTL
Input Power:	+25dBm max.
Impedance:	50Ω

Mechanical

Size*1:	30*20*8mm 1.181*0.787*0.315in
Weight:	100g max.
RF Connectors:	SMA Female
Mounting:	3-M2.5 through hole 4-M2, depth 4mm

Environmental

Operating Temperature:	-40~+60℃
Non-operating Temperature:	-55~+85℃

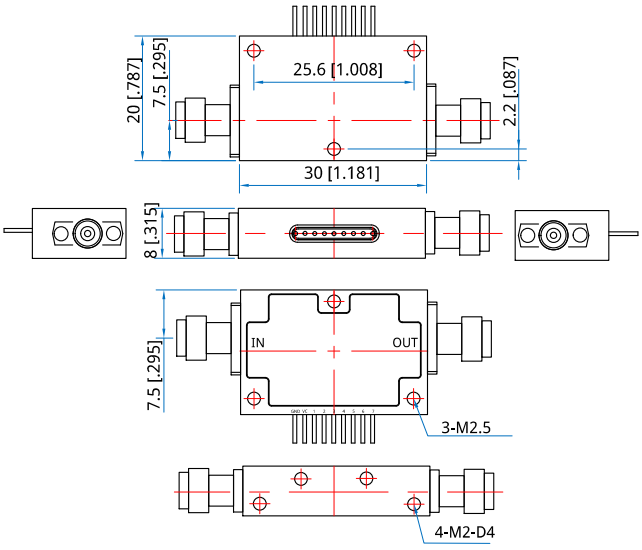

Unit: mm [in]
Tolerance: ±0.2mm [±0.008in]

How To Order

NDA-30000-40000-30-0.5

Customization is available upon request.

Digital Controlled Attenuator

NDA-35000-40000-60-0.5

35~40GHz, 60dB, 0.5dB

Features:
* Broadband
* High Dynamic Range

Applications:
* Wireless
* Transmitter
* Laboratory Test
* Radar

Electrical

Frequency:	35~40GHz
Control Bitsl:	7
Insertion Loss:	15dB typ.
Attenuation Range:	0~60dB
Step:	0.5dB
VSWR:	1.5 typ.
Voltage:	±5V DC
Input Power:	+15dBm max.

Mechanical

Size*1:	30*20*8mm 1.181*0.787*0.315in
Weight:	100g max.
RF Connectors:	2.92mm Female
Power Supply & Control Interface Connectors:	Feed Through/Terminal Post
Mounting:	3-Φ2.1mm through-hole 4-M2, depth 4mm

[1] Exclude connectors.

Environmental

Operating Temperature:	-20~+50℃
Non-operating Temperature:	-40~+85℃

Outline Drawings

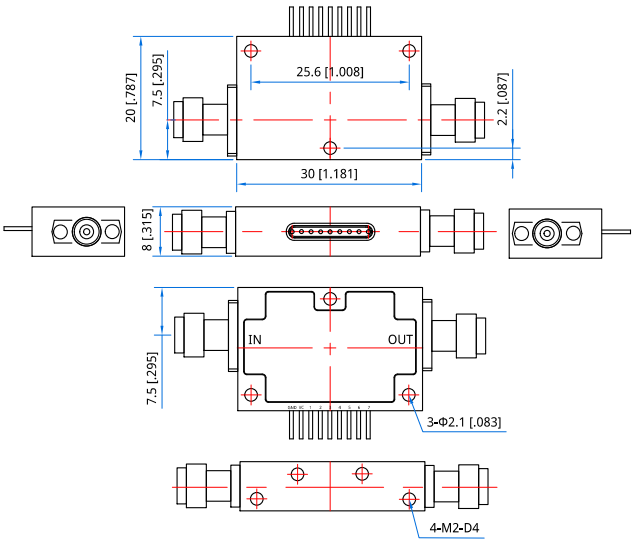

Unit: mm [in]
Tolerance: ±0.2mm [±0.008in]

Pin Numbering

Pin	Function	Pin	Function
1	0.5dB (LSB)	5	8dB
2	1dB	6	16dB
3	2dB	7	32dB (MSB)
4	4dB		

How To Order

NDA-35000-40000-60-0.5

Customization is available upon request.

Digital Controlled Attenuator

NDA-4000-32000-31.5-0.5

4~32GHz, 31.5dB, 0.5dB

Features:
* Broadband
* High Dynamic Range

Applications:
* Wireless
* Transmitter
* Laboratory Test
* Radar

Electrical

Frequency:	4~32GHz
Insertion Loss:	5.5dB max.
Attenuation Flatness:	±1.2dB typ.@15dB
	±2dB typ.@31.5dB
Step:	0.5dB
Attenuation Range:	0~31.5dB
Attenuation Accuracy:	±1.2dB typ.@0.5~15dB
	±2dB typ.@15~31.5dB
VSWR:	2 max.
Voltage/Current:	+3.3V @20mA max.
	-3.3V @20mA max.
Input Power:	+25dBm max.

Mechanical

Size[*1]:	34*18*12mm
	1.339*0.709*0.472in
Swiching Time:	1us
RF Connectors:	2.92mm Female
Power Supply & Control Interface Connectors:	D-Sub 15
Housing Material:	Nickel Plated
Mounting:	4-Φ2.7 through-hole
Logic Input:	On: 1(+1.2~3.3V)
	Off: 0(0~0.8V)

[1] Exclude connectors.

Pin Numbering

Pin	Function	Pin	Function
1	+3.3V	6	C3
2	COM	7	C4
3	-3.3V	8	C5
4	C1	9	C6
5	C2	10-15	NC

Environmental

Operating Temperature:	-45~+85℃
Non-operating Temperature:	-55~+125℃

Outline Drawings

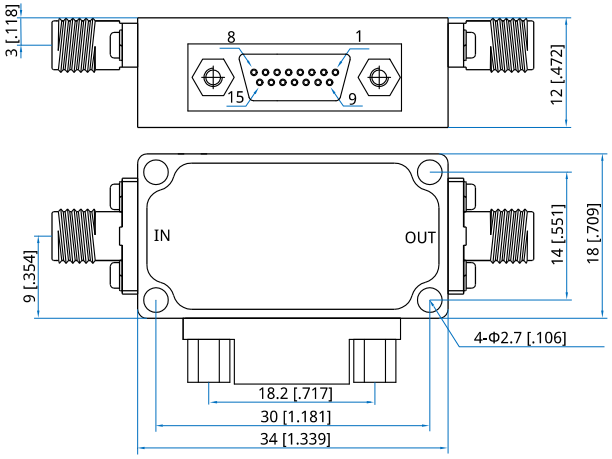

Unit: mm [in]
Tolerance: ±0.2mm [±0.008in]

Logic Table

State	C1	C2	C3	C4	C5	C6	Att.
							31.5dB
-	0	0	0	0	0	0	Reference IL
1	1	0	0	0	0	0	0.5dB
2	0	1	0	0	0	0	1dB
3	0	0	1	0	0	0	2dB
4	0	0	0	1	0	0	4dB
5	0	0	0	0	1	0	8dB
6	0	0	0	0	0	1	16dB
7	1	1	1	1	1	1	31.5dB

How To Order

NDA-4000-32000-31.5-0.5

Customization is available upon request.

Digital Controlled Attenuator

NDA-4000-32000-63.5-0.5

4~32GHz, 63.5dB, 0.5dB

Features:
* Broadband
* High Dynamic Range

Applications:
* Wireless
* Transmitter
* Laboratory Test
* Radar

Electrical

Frequency:	4~32GHz
Insertion Loss:	10dB max.
Attenuation Flatness:	±1dB typ. @20dB
	±2dB typ. @40dB
	±3dB typ. @63.5dB
Step:	0.5dB
Attenuation Range:	0~63.5dB
Attenuation Accuracy:	±2dB typ. @0~63.5dB
VSWR:	2 max.
Voltage/Current:	+3.3V @30mA max.
	-3.3V @30mA max.
Input Power:	+25dBm max.

Mechanical

Size[*1]:	34*18*12mm
	1.339*0.709*0.472in
Swiching Time:	200ns
RF Connectors:	2.92mm Female
Power Supply & Control Interface Connectors:	J30J-15ZKP
Housing Material:	Nickel Plated
Mounting:	4-Φ2.7 through-hole
Logic Input:	On: 1(+1.2~3.3V)
	Off: 0(0~0.8V)

[1] Exclude connectors.

Pin Numbering

Pin	Function	Pin	Function
1	+3.3V	7	C4
2	COM	8	C5
3	-3.3V	9	C6
4	C1	10	C7
5	C2	11-15	NC
6	C3		

Environmental

Operating Temperature:	-45~+85℃
Non-operating Temperature:	-55~+125℃

Outline Drawings

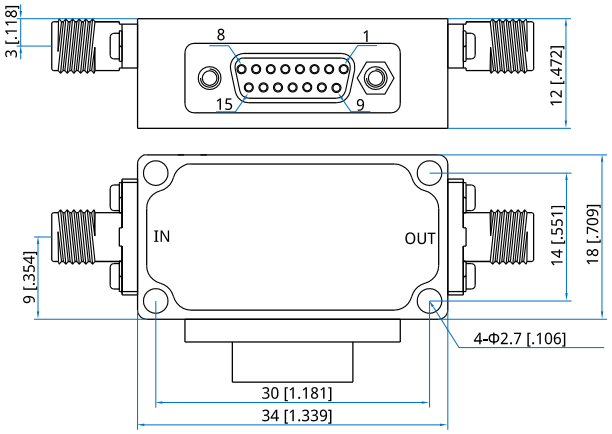

Unit: mm [in]
Tolerance: ±0.2mm [±0.008in]

Logic Table

State	C1	C2	C3	C4	C5	C6	C7	Att.
								63.5dB
-	0	0	0	0	0	0	0	Reference IL
1	1	0	0	0	0	0	0	0.5dB
2	0	1	0	0	0	0	0	1dB
3	0	0	1	0	0	0	0	2dB
4	0	0	0	1	0	0	0	4dB
5	0	0	0	0	1	0	0	8dB
6	0	0	0	0	0	1	0	16dB
7	0	0	0	0	0	0	1	32dB
8	1	1	1	1	1	1	1	63.5dB

How To Order

NDA-4000-32000-63.5-0.5

Customization is available upon request.

Digital Controlled Attenuator

NDA-4000-8000-31.5-0.5

4~8GHz, 31.5dB, 0.5dB

Features:
* Broadband
* High Dynamic Range

Applications:
* Wireless
* Transmitter
* Laboratory Test
* Radar

Electrical

Frequency:	4~8GHz
Insertion Loss:	4.2dB max.
Attenuation Flatness:	±0.4dB typ. @0.5~16dB
	±0.8dB typ. @17.5~31.5dB
Step:	0.5dB
Attenuation Range:	0~31.5dB
Attenuation Accuracy:	±0.5dB typ. @0.5~16dB
	±0.8dB typ. @17.5~31.5dB
VSWR:	1.8 max.
Voltage/Current:	-5V @15mA typ.
Input Power:	+25dBm max.

Mechanical

Size[*1]:	32*20*12.7mm
	1.26*0.787*0.5in
RF Connectors:	SMA Female
Power Supply & Control Interface Connectors:	J30J-15ZKP
Mounting:	4-Φ2.7mm through-hole
Logic Input:	On: 1(+3~+5V)
	Off: 0(0~+0.5V)

[1] Exclude connectors.

Pin Numbering

Pin	Function	Pin	Function
1	-5V	7	C4:-4dB
2	GND	8	C5:-8dB
3	NC	9	C6:-16dB
4	C1:-0.5dB	10	NC
5	C2:-1dB	11~15	NC
6	C3:-2dB		

Environmental

Operating Temperature:	-45~+85°C
Non-operating Temperature:	-55~+125°C

Outline Drawings

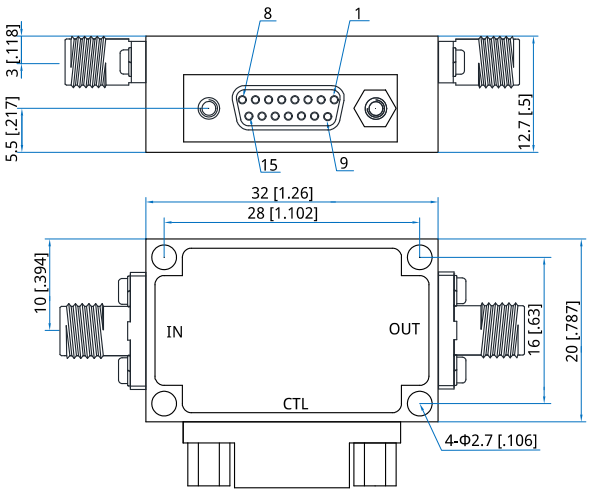

Unit: mm [in]
Tolerance: ±0.2mm [±0.008in]

Logic Table

State	C1	C2	C3	C4	C5	C6	Attenuation State
-	0	0	0	0	0	0	Reference IL
1	1	0	0	0	0	0	0.5dB
2	0	1	0	0	0	0	1dB
3	0	0	1	0	0	0	2dB
4	0	0	0	1	0	0	4dB
5	0	0	0	0	1	0	8dB
6	0	0	0	0	0	1	16dB
7	1	1	1	1	1	1	31.5dB

How To Order

NDA-4000-8000-31.5-0.5

Customization is available upon request.

Digital Controlled Attenuator

NDA-500-18000-31.5-0.5

0.5~18GHz, 31.5dB, 0.5dB

Features:
* Broadband
* High Dynamic Range

Applications:
* Wireless
* Transmitter
* Laboratory Test
* Radar

Electrical

Frequency:	0.5~18GHz
Insertion Loss:	5.5dB max.
Attenuation Flatness:	±0.7dB typ. @0.5~16dB
	±1dB typ. @17.5~31.5dB
Step:	0.5dB
Attenuation Range:	0~31.5dB
Attenuation Accuracy:	±0.8dB typ. @0.5~16dB
	±1dB typ. @17.5~31.5dB
VSWR:	2 max.
Voltage/Current:	-5V @15mA typ.
Input Power:	+25dBm max.

Mechanical

Size[*1]:	32*20*12.7mm
	1.26*0.787*0.5in
RF Connectors:	SMA Female
Power Supply & Control Interface Connectors:	J30J-15ZKP
Mounting:	4-Φ2.7mm through-hole
Logic Input:	On: 1(+3~+5V)
	Off: 0(0~+0.5V)

[1] Exclude connectors.

Pin Numbering

Pin	Function	Pin	Function
1	-5V	7	C4:-4dB
2	GND	8	C5:-8dB
3	NC	9	C6:-16dB
4	C1:-0.5dB	10	NC
5	C2:-1dB	11~15	NC
6	C3:-2dB		

Environmental

Operating Temperature:	-45~+85°C
Non-operating Temperature:	-55~+125°C

Outline Drawings

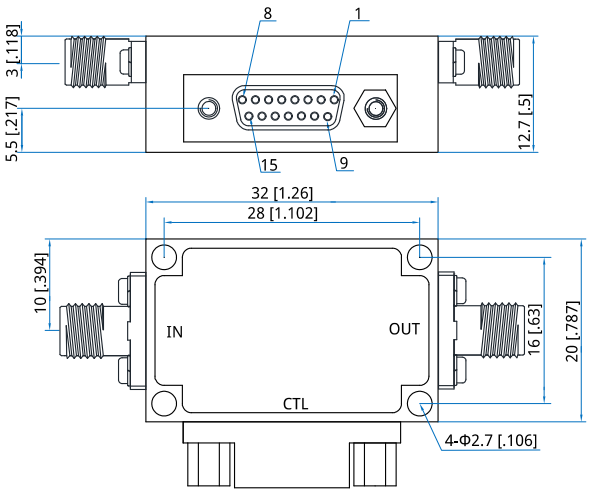

Unit: mm [in]
Tolerance: ±0.2mm [±0.008in]

Logic Table

State	C1	C2	C3	C4	C5	C6	Attenuation State
-	0	0	0	0	0	0	Reference IL
1	1	0	0	0	0	0	0.5dB
2	0	1	0	0	0	0	1dB
3	0	0	1	0	0	0	2dB
4	0	0	0	1	0	0	4dB
5	0	0	0	0	1	0	8dB
6	0	0	0	0	0	1	16dB
7	1	1	1	1	1	1	31.5dB

How To Order

NDA-500-18000-31.5-0.5

Customization is available upon request.

Digital Controlled Attenuator

NDA-500-18000-62-2

0.5~18GHz, 0~62dB, 2dB

Features:
* Broadband
* High Dynamic Range

Applications:
* Wireless
* Transmitter
* Laboratory Test
* Radar

Electrical

Frequency:	0.5~18GHz
Insertion Loss:	9dB max.
Attenuation Flatness:	±1.5dB max.
Control Bits:	5
Step:	2dB
Attenuation Range:	0~62dB
Attenuation Accuracy:	3% of attenuation setting max.
Switching Time:	100nS max.
VSWR:	2 typ.
Voltage:	±5V DC
Current:	50mA typ.
Input Power Without Damage:	27dBm max.

Mechanical

Size*1:	28*18*10mm 1.102*0.709*0.394in
RF Connectors:	SMA Female
Power Supply & Control Interface Connectors:	Feed Through/Terminal Post
Housing Material:	Aluminum
Mounting:	4-Φ2.2mm through-hole

[1] Exclude connectors.

Environmental

Operating Temperature:	-40~+70℃
Non-operating Temperature:	-55~+85℃

Outline Drawings

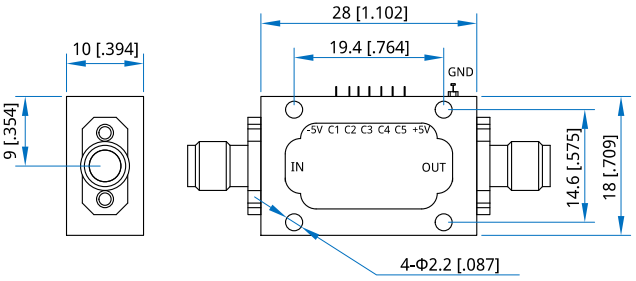

Unit: mm [in]
Tolerance: ±0.2mm [±0.008in]

Pin Numbering

Pin	Function (Attenuation)
C1	2dB
C2	4dB
C3	8dB
C4	16dB
C5	32dB

How To Order

NDA-500-18000-62-2

Customization is available upon request.

Digital Controlled Attenuator

NDA-500-40000-31.5-0.5

0.5~40GHz, 31.5dB, 0.5dB

Features:
* Broadband
* High Dynamic Range

Applications:
* Wireless
* Transmitter
* Laboratory Test
* Radar

Electrical

Frequency:	0.5~40GHz
Insertion Loss:	7dB max.
Attenuation Flatness:	±1.2dB typ.@15dB
	±2dB typ.@31.5dB
Step:	0.5dB
Attenuation Range:	0~31.5dB
Attenuation Accuracy:	±1.2dB typ.@0.5~15dB
	±2dB typ.@15~31.5dB
VSWR:	1.6 max. @0.5~15GHz
	2.0 max. @15~40GHz
Voltage/Current:	+3.3V @20mA Max.
	-3.3V @20mA Max.
Input Power:	+25dBm max.

Mechanical

Size*1:	34*18*12mm
	1.339*0.709*0.472in
Swiching Time:	1 us
RF Connectors:	2.92mm Female
Power Supply & Control Interface Connectors:	D-Sub 15
Housing Material:	Nickel Plated
Mounting:	4-Φ2.7 through-hole
Logic Input:	On: 1(+1.2~3.3V)
	Off: 0(0~0.8V)

[1] Exclude connectors.

Pin Numbering

Pin	Function	Pin	Function
1	+3.3V	6	C3
2	COM	7	C4
3	-3.3V	8	C5
4	C1	9	C6
5	C2	10-15	NC

Environmental

Operating Temperature:	-45~+85℃
Non-operating Temperature:	-55~+125℃

Outline Drawings

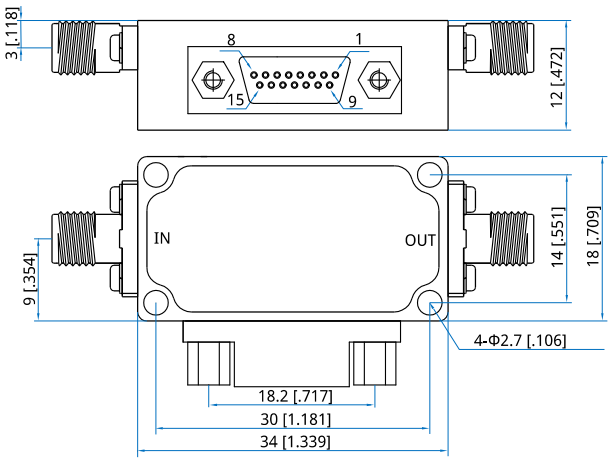

Unit: mm [in]
Tolerance: ±0.2mm [±0.008in]

Logic Table

State	C1	C2	C3	C4	C5	C6	Att.
							31.5dB
-	0	0	0	0	0	0	Reference IL
1	1	0	0	0	0	0	0.5dB
2	0	1	0	0	0	0	1dB
3	0	0	1	0	0	0	2dB
4	0	0	0	1	0	0	4dB
5	0	0	0	0	1	0	8dB
6	0	0	0	0	0	1	16dB
7	1	1	1	1	1	1	31.5dB

How To Order

NDA-500-40000-31.5-0.5

Customization is available upon request.

Digital Controlled Attenuator

NDA-500-40000-63.5-0.5

0.5~40GHz, 63.5dB, 0.5dB

Features:
* Broadband
* High Dynamic Range

Applications:
* Wireless
* Transmitter
* Laboratory Test
* Radar

Electrical

Frequency:	0.5~40GHz
Insertion Loss:	11.5dB max.
Attenuation Flatness:	±1dB typ.@20dB
	±2dB typ.@40dB
	±3dB typ.@63.5dB
Step:	0.5dB
Attenuation Range:	0~63.5dB
Attenuation Accuracy:	±2dB typ.@0-63.5dB
VSWR:	1.7 max. @0.5~18GHz
	2.0 max. @18~40GHz
Voltage/Current:	+3.3V @30mA Max.
	-3.3V @30mA Max.
Input Power:	+25dBm max.

Mechanical

Size*1:	34*18*12mm
	1.339*0.709*0.472in
Switching Time:	200 ns
RF Connectors:	SMA Female
Power Supply & Control Interface Connectors:	D-Sub 15
Housing Material:	Nickel Plated
Mounting:	4-Φ2.7 through-hole
Logic Input:	On: 1(+1.2~3.3V)
	Off: 0(0~0.8V)

[1] Exclude connectors.

Pin Numbering

Pin	Function	Pin	Function
1	+3.3V	7	C4
2	COM	8	C5
3	-3.3V	9	C6
4	C1	10	C7
5	C2	11-15	NC
6	C3		

Environmental

Operating Temperature:	-45~+85℃
Non-operating Temperature:	-55~+125℃

Outline Drawings

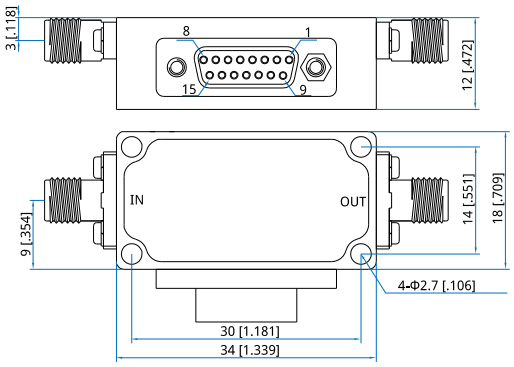

Unit: mm [in]
Tolerance: ±0.2mm [±0.008in]

Logic Table

State	C1	C2	C3	C4	C5	C6	C7	Att.
								63.5dB
-	0	0	0	0	0	0	0	Reference IL
1	1	0	0	0	0	0	0	0.5dB
2	0	1	0	0	0	0	0	1dB
3	0	0	1	0	0	0	0	2dB
4	0	0	0	1	0	0	0	4dB
5	0	0	0	0	1	0	0	8dB
6	0	0	0	0	0	1	0	16dB
7	0	0	0	0	0	0	1	32dB
8	1	1	1	1	1	1	1	63.5dB

How To Order

NDA-500-40000-63.5-0.5

Customization is available upon request.

Digitally Controlled Attenuators

NDA-50-4000-31-1

50MHz~4GHz

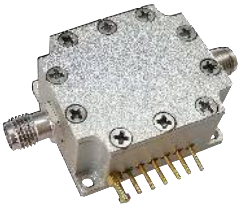

Features:
* Broadband
* High Dynamic Range

Applications:
* Wireless
* Transmitter
* Laboratory Test
* Radar

Electrical

Frequency:	0.05~4GHz
Insertion Loss:	1.5dB typ., 3dB max.
Attenuation Flatness:	±1.5dB max.
Control Bits:	5
Step:	1dB
Attenuation Range:	0~31dB
Attenuation Accuracy:	±0.5dB typ.
Switching Time:	1uS typ.
Input VSWR:	1.2 typ.
Output VSWR:	1.8 typ.
Voltage:	+5V DC
Current:	1mA typ.
Input Power:	24dBm max.

Absolute Maximum Ratings*1

RF Input Power:	30dBm
Voltage:	-0.3V min., +5.5V max.

[1] Permanent damage may occur if any of these limits are exceeded.

Mechanical

Size*2:	30*26*15mm 1.181*1.024*0.591in
RF Connectors:	SMA Female
Power Supply & Control Interface Connectors:	Feed Through/Terminal Post
Housing Material:	Aluminum
Mounting:	4-Φ2.2mm through-hole

[2] Exclude connectors.

Environmental

Operating Temperature:	-40~+60℃
Non-operating Temperature:	-55~+70℃

Pin Numbering

Pin	Function	Pin	Function
1	GND	C3	4dB
2	+5V	C4	8dB
C1	1dB	C5	16dB
C2	2dB		

Outline Drawings

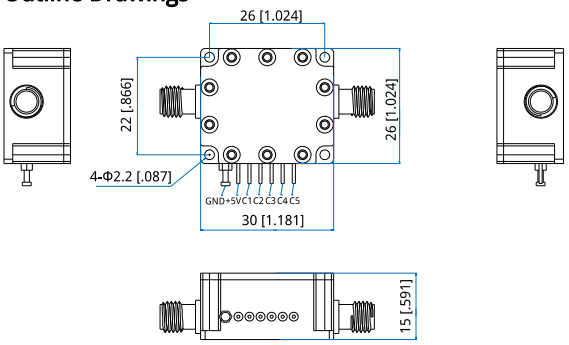

Unit: mm [in]
Tolerance: ±0.2mm [±0.008in]

How To Order

NDA-50-4000-31-1

Customization is available upon request.

Typical Performance Curves

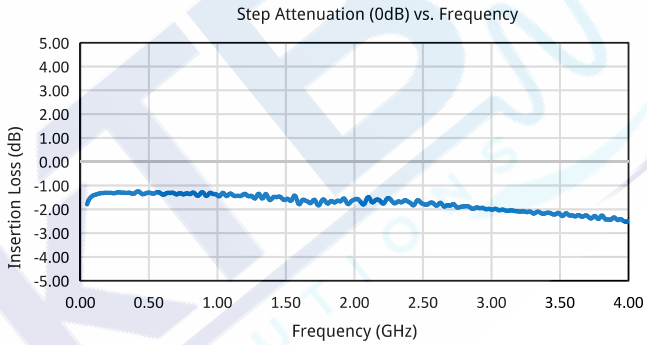

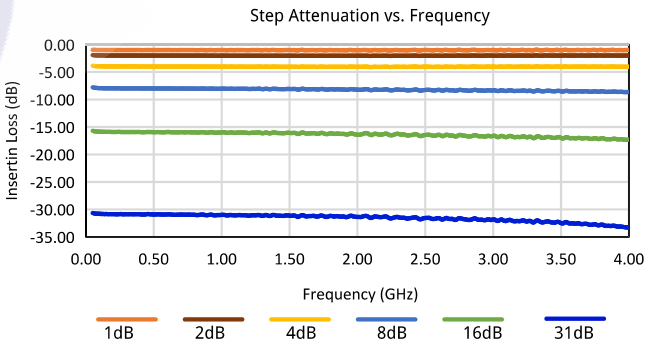

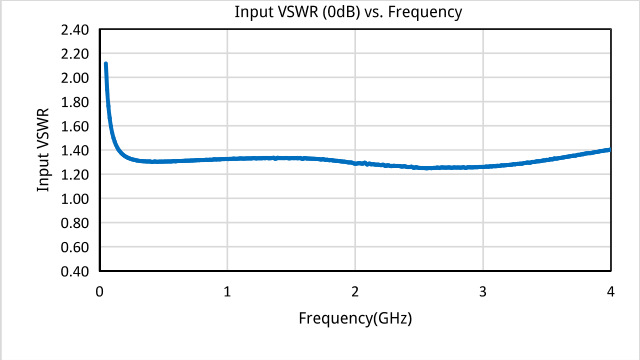
Input VSWR (0dB) vs. Frequency
Input VSWR
Frequency(GHz)

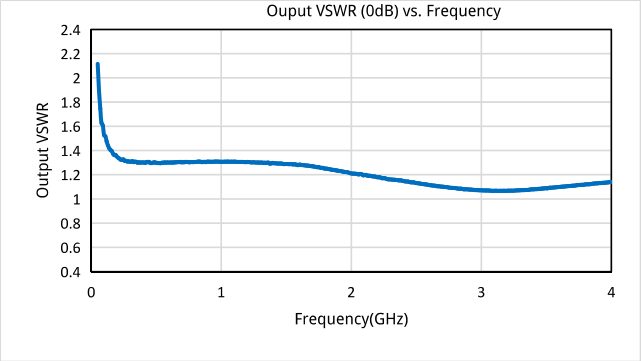
Ouput VSWR (0dB) vs. Frequency
Output VSWR
Frequency(GHz)

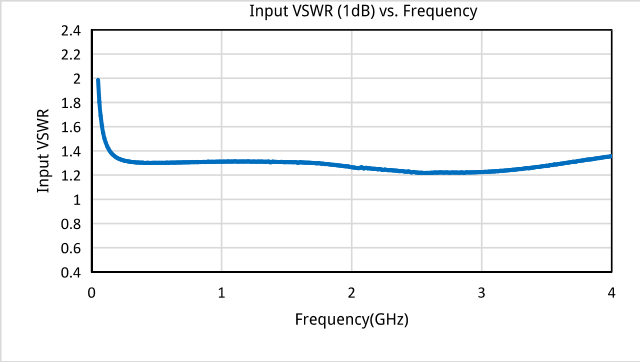
Input VSWR (1dB) vs. Frequency
Input VSWR
Frequency(GHz)

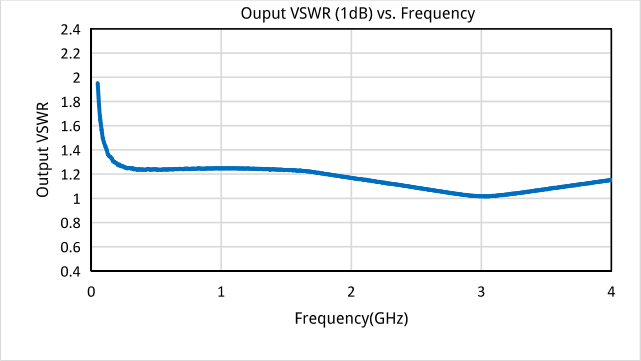
Ouput VSWR (1dB) vs. Frequency
Output VSWR
Frequency(GHz)

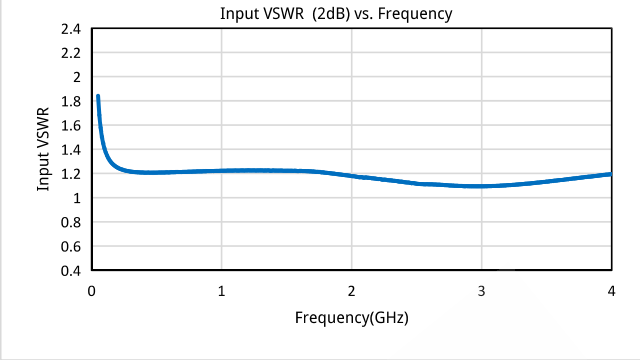
Input VSWR (2dB) vs. Frequency
Input VSWR
Frequency(GHz)

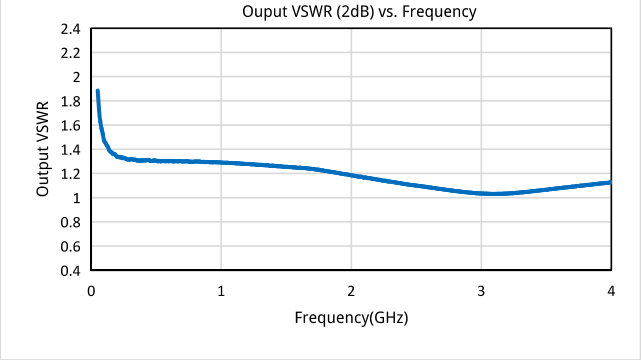
Ouput VSWR (2dB) vs. Frequency
Output VSWR
Frequency(GHz)

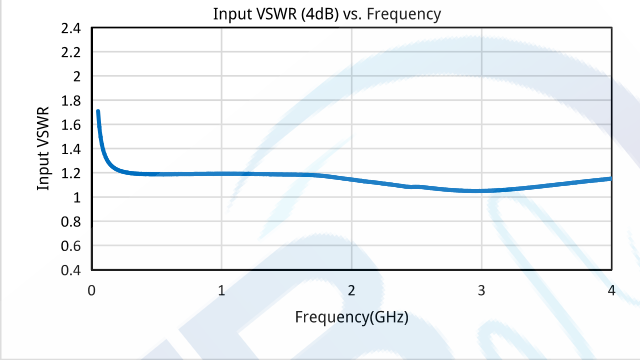
Input VSWR (4dB) vs. Frequency
Input VSWR
Frequency(GHz)

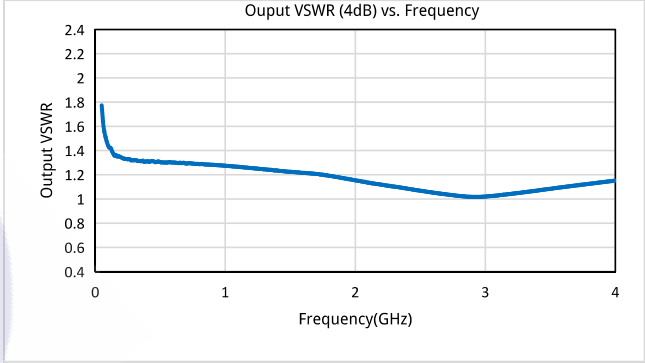
Ouput VSWR (4dB) vs. Frequency
Output VSWR
Frequency(GHz)

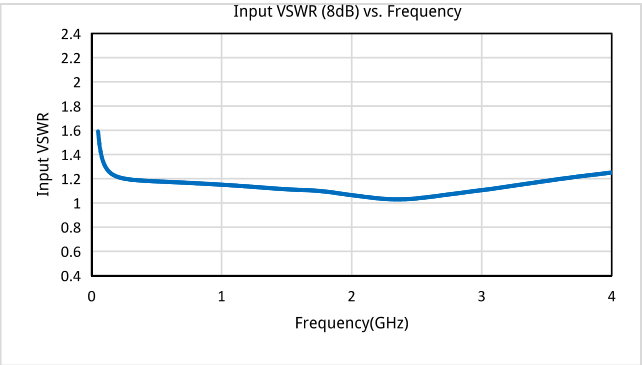
Input VSWR (8dB) vs. Frequency
Input VSWR
Frequency(GHz)

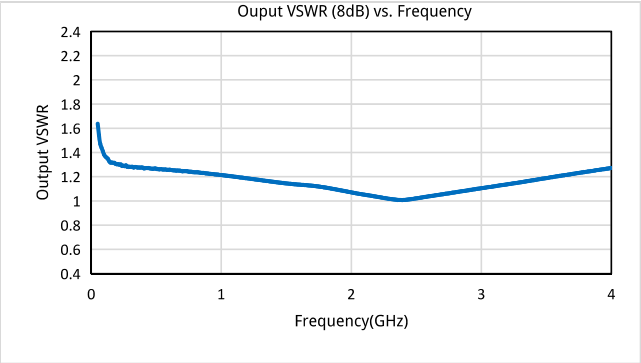
Ouput VSWR (8dB) vs. Frequency
Output VSWR
Frequency(GHz)

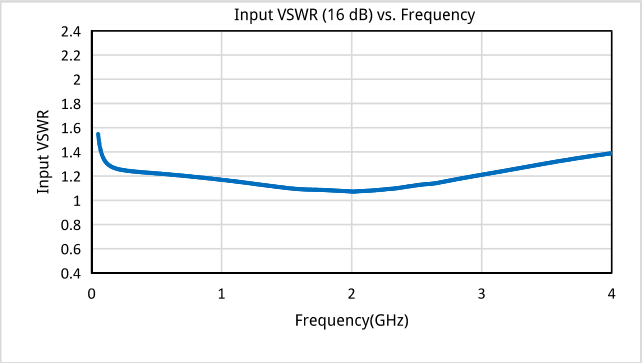
Input VSWR (16 dB) vs. Frequency
Input VSWR
Frequency(GHz)

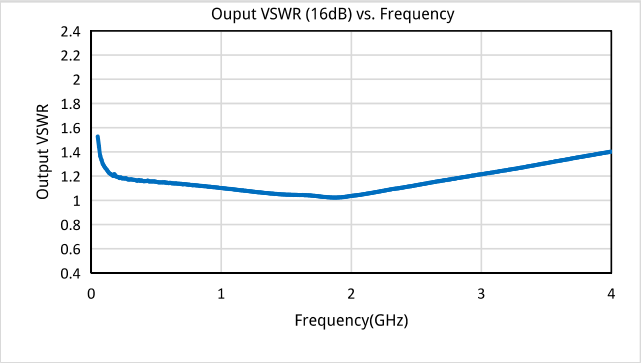
Ouput VSWR (16dB) vs. Frequency
Output VSWR
Frequency(GHz)

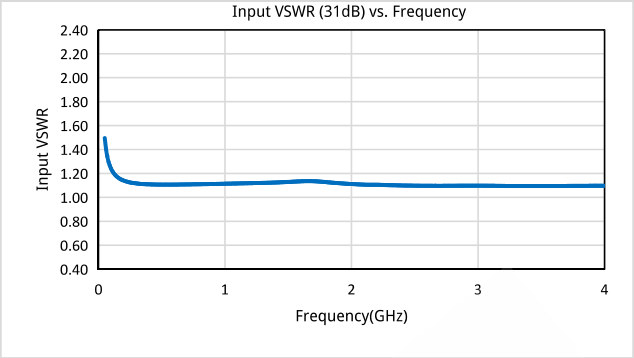
Input VSWR (31dB) vs. Frequency
Input VSWR
Frequency(GHz)

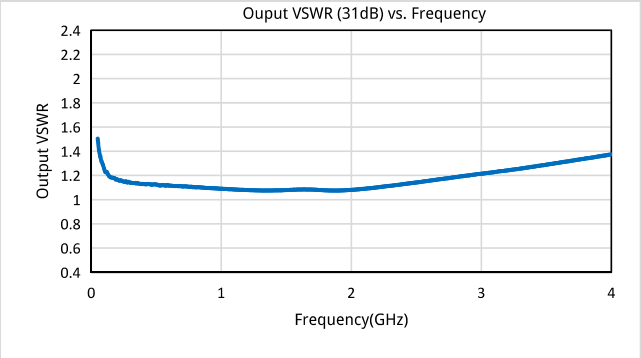
Ouput VSWR (31dB) vs. Frequency
Output VSWR
Frequency(GHz)

Digital Controlled Attenuator

NDA-6000-18000-31.5-0.5

6~18GHz, 31.5dB, 0.5dB

Features:
* Broadband
* High Dynamic Range

Applications:
* Wireless
* Transmitter
* Laboratory Test
* Radar

Electrical

Frequency:	6~18GHz
Insertion Loss:	5.5dB max.
Attenuation Flatness:	±0.7dB typ. @0.5~16dB
	±1dB typ. @17.5~31.5dB
Step:	0.5dB
Attenuation Range:	0~31.5dB
Attenuation Accuracy:	±0.8dB typ. @0.5~16dB
	±1dB typ. @17.5~31.5dB
VSWR:	2 max.
Voltage/Current:	-5V @15mA typ.
Input Power:	+25dBm max.

Mechanical

Size[*1]:	32*20*12.7mm
	1.26*0.787*0.5in
RF Connectors:	SMA Female
Power Supply & Control Interface Connectors:	J30J-15ZKP
Mounting:	4-Φ2.7mm through-hole
Logic Input:	On: 1(+3~+5V)
	Off: 0(0~+0.5V)

[1] Exclude connectors.

Pin Numbering

Pin	Function	Pin	Function
1	-5V	7	C4:-4dB
2	GND	8	C5:-8dB
3	NC	9	C6:-16dB
4	C1:-0.5dB	10	NC
5	C2:-1dB	11~15	NC
6	C3:-2dB		

Environmental

Operating Temperature:	-45~+85°C
Non-operating Temperature:	-55~+125°C

Outline Drawings

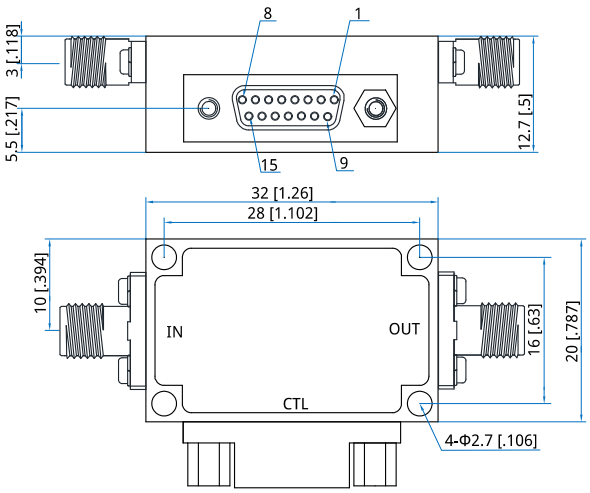

Unit: mm [in]
Tolerance: ±0.2mm [±0.008in]

Logic Table

State	C1	C2	C3	C4	C5	C6	Attenuation State
-	0	0	0	0	0	0	Reference IL
1	1	0	0	0	0	0	0.5dB
2	0	1	0	0	0	0	1dB
3	0	0	1	0	0	0	2dB
4	0	0	0	1	0	0	4dB
5	0	0	0	0	1	0	8dB
6	0	0	0	0	0	1	16dB
7	1	1	1	1	1	1	31.5dB

How To Order

NDA-6000-18000-31.5-0.5

Customization is available upon request.

Digital Controlled Attenuator

NDA-7000-9000-32-0.25

7~9GHz, 32dB, 0.25dB

Features:
* Broadband
* High Dynamic Range

Applications:
* Wireless
* Transmitter
* Laboratory Test
* Radar

Electrical

Frequency:	7~9GHz
Insertion Loss:	5.5dB max.
Attenuation Flatness:	±2.5dB max.
Step:	0.25dB
Attenuation Range:	0~32dB
Attenuation Accuracy:	±2dB max.
VSWR:	2 max.
Voltage/Current:	-5V @50mA Max.
Input Power:	+24dBm max.

Mechanical

Size*1:	32*20*12.7mm
	1.26*0.787*0.5in
RF Connectors:	SMA Female
Power Supply & Control Interface Connectors:	D-Sub 15
Housing Material:	Aluminum
Mounting:	4-Φ2.7 through-hole
Logic Input:	On: 1(+5V)
	Off: 0(0V)

[1] Exclude connectors.

Pin Numbering

Pin	Function	Pin	Function
1	NC	7	C4
2	COM	8	C5
3	-5V	9	C6
4	C1	10	C7
5	C2	11	C8
6	C3	10-15	NC

Environmental

Operating Temperature:	-40~+85℃
Non-operating Temperature:	-55~+125℃

Outline Drawings

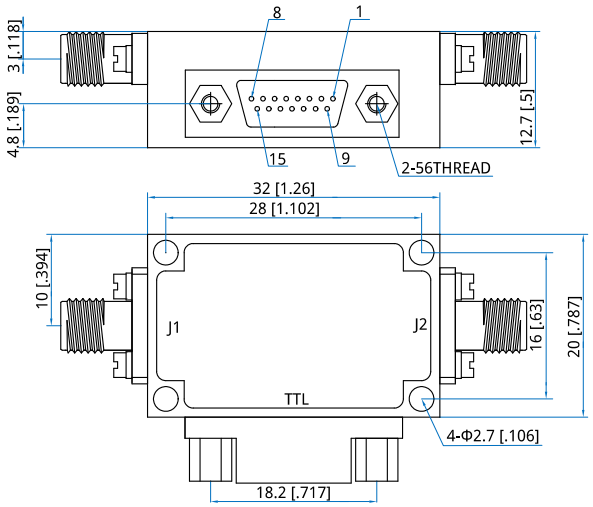

Unit: mm [in]
Tolerance: ±0.2mm [±0.008in]

Logic Table

C1	C2	C3	C4	C5	C6	C7	C8	Attenuation State
0	0	0	0	0	0	0	0	Reference
1	0	0	0	0	0		0	0.25dB
0	1	0	0	0	0	0	0	0.5dB
0	0	1	0	0	0	0	0	1dB
0	0	0	1	0	0	0	0	2dB
0	0	0	0	1	0	0	0	4dB
0	0	0	0	0	1	0	0	8dB
0	0	0	0	0	0	1	0	16dB
0	0	0	0	0	0	0	1	32dB
1	1	1	1	1	1	1	1	63.75dB

How To Order

NDA-7000-9000-32-0.25

Customization is available upon request.

Digital Controlled Attenuator

NDA-8000-12000-101.5-0.5

8~12GHz, 101.5dB, 0.5dB

Features:
* Broadband
* High Dynamic Range

Applications:
* Wireless
* Transmitter
* Laboratory Test
* Radar

Electrical

Frequency:	8~12GHz
Insertion Loss:	21dB max.
Attenuation Range:	0~101.5dB
Step:	0.5dB
Attenuation Accuracy:	±(0.4+5% of attenuation setting) max.
VSWR:	2 max.
Switching Time:	200ns max.
Input IP3:	40dBm min.
Input Power:	25dBm max.
Voltage/Current:	-5V/200mA max.
Control:	TTL

Mechanical

Size*1:	100*40*18mm 3.937*1.575*0.709in
RF Connectors:	SMA Female
Power Supply & Control Interface Connectors:	J30J-15ZKP
Mounting:	4-Φ2.4mm through-hole

[1] Exclude connectors.

Environmental

Operating Temperature:	-40~+85℃
Non-operating Temperature:	-55~+125℃

Outline Drawings

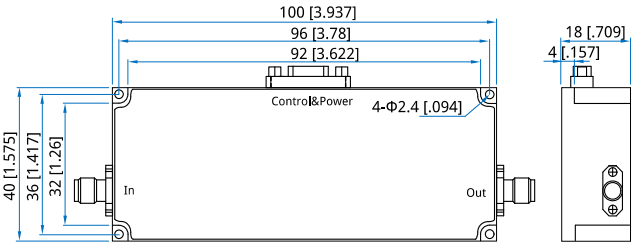

Unit: mm [in]
Tolerance: ±0.2mm [±0.008in]

Pin Numbering

Pin	Function	Pin	Function
1	-5V	9	16dB
2	GND	10	30dB
3	DGND	11	30dB
4	0.5dB (LSB)	12	10dB (MSB)
5	1dB	13	NC
6	2dB	14	NC
7	4dB	15	NC
8	8dB		

How To Order

NDA-8000-12000-101.5-0.5

Customization is available upon request.

Digital Controlled Attenuator

NDA-8000-12000-110-10

8~12GHz, 110dB, 10dB

Features:
* Broadband
* High Dynamic Range

Applications:
* Wireless
* Transmitter
* Laboratory Test
* Radar

Electrical

Frequency:	8~12GHz
Insertion Loss:	8dB typ.
Attenuation Range:	0 ~ 110dB
Step:	10dB
Control Bits:	4
Attenuation Accuracy:	3~5% typ of attenuation setting
VSWR:	1.5 typ.
Voltage:	±5V DC
Input Power:	+20dBm max.
Impedance:	50Ω
Control:	TTL High: On TTL Low/NC: Off

Mechanical

Size[*1]:	60*45*15mm 2.362*1.772*0.591in
Weight:	400g max.
RF Connectors:	SMA Female
Power Supply & Control Interface:	J30J-9ZK
Mounting:	4-Φ2.7mm through-hole

[1] Exclude connectors.

Environmental

Operating Temperature:	-20~+60℃
Non-operating Temperature:	-40~+85℃

Outline Drawings

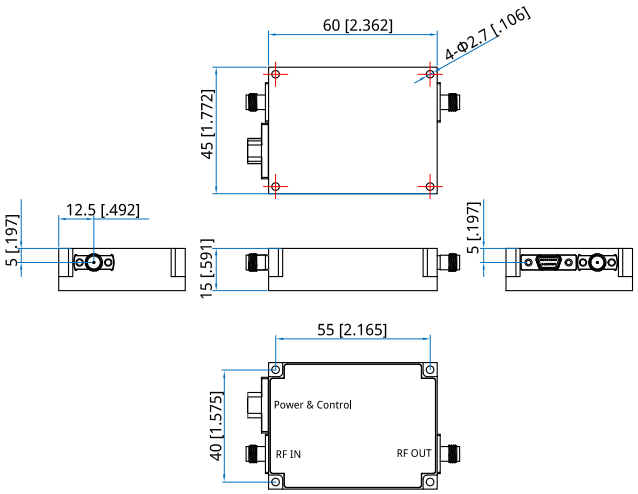

Unit: mm [in]
Tolerance: ±0.2mm [±0.008in]

How To Order

NDA-8000-12000-110-10

Customization is available upon request.

Digital Controlled Attenuator

NDA-8000-12000-31.5-0.5

8~12GHz, 31.5dB, 0.5dB

Features:
* Broadband
* High Dynamic Range

Applications:
* Wireless
* Transmitter
* Laboratory Test
* Radar

Electrical

Frequency:	8~12GHz
Insertion Loss:	4.7dB max.
Attenuation Flatness:	±0.4dB typ. @0.5~16dB
	±0.8dB typ. @17.5~31.5dB
Step:	0.5dB
Attenuation Range:	0~31.5dB
Attenuation Accuracy:	±0.5dB typ. @0.5~16dB
	±0.8dB typ. @17.5~31.5dB
VSWR:	2 max.
Voltage/Current:	-5V @15mA typ.
Input Power:	+25dBm max.

Mechanical

Size[*1]:	32*20*12.7mm
	1.26*0.787*0.5in
RF Connectors:	SMA Female
Power Supply & Control Interface Connectors:	J30J-15ZKP
Mounting:	4-Φ2.7mm through-hole
Logic Input:	On: 1(+3~+5V)
	Off: 0(0~+0.5V)

[1] Exclude connectors.

Pin Numbering

Pin	Function	Pin	Function
1	-5V	7	C4:-4dB
2	GND	8	C5:-8dB
3	NC	9	C6:-16dB
4	C1:-0.5dB	10	NC
5	C2:-1dB	11~15	NC
6	C3:-2dB		

Environmental

Operating Temperature:	-45~+85°C
Non-operating Temperature:	-55~+125°C

Outline Drawings

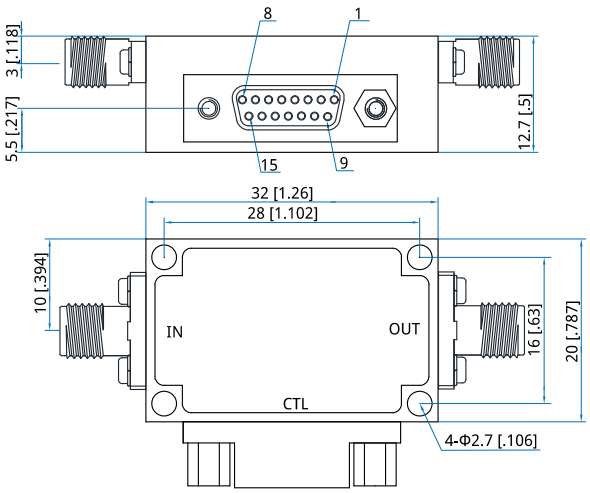

Unit: mm [in]
Tolerance: ±0.2mm [±0.008in]

Logic Table

State	C1	C2	C3	C4	C5	C6	Attenuation State
-	0	0	0	0	0	0	Reference IL
1	1	0	0	0	0	0	0.5dB
2	0	1	0	0	0	0	1dB
3	0	0	1	0	0	0	2dB
4	0	0	0	1	0	0	4dB
5	0	0	0	0	1	0	8dB
6	0	0	0	0	0	1	16dB
7	1	1	1	1	1	1	31.5dB

How To Order

NDA-8000-12000-31.5-0.5

Customization is available upon request.

Digital Controlled Attenuator

NDA-8000-12000-31-1

8~12GHz, 31dB, 1dB

Features:
* Broadband
* High Dynamic Range

Applications:
* Wireless
* Transmitter
* Laboratory Test
* Radar

Electrical

Frequency:	8~12GHz
Insertion Loss:	3.5dB max.
Attenuation Flatness:	±0.5dB max.
Control Bits:	5
Step:	1dB
Attenuation Range:	0~31dB
Attenuation Accuracy:	±2% of attenuation setting max.
Switching Time:	100nS max.
Input VSWR:	1.5 max.
Output VSWR:	1.5 max.
Voltage:	-5V DC
Current:	0.1A typ.
Input Power Without Damage:	27dBm max.

Mechanical

Size[*1]:	38*20*12mm 1.496*0.787*0.472in
RF Connectors:	SMA Female
Power Supply & Control Interface Connectors:	J30J-9ZKP
Housing Material:	Aluminum
Mounting:	4-Φ2.8mm through-hole

[1] Exclude connectors.

Environmental

Operating Temperature:	-40~+70℃
Non-operating Temperature:	-55~+70℃

Outline Drawings

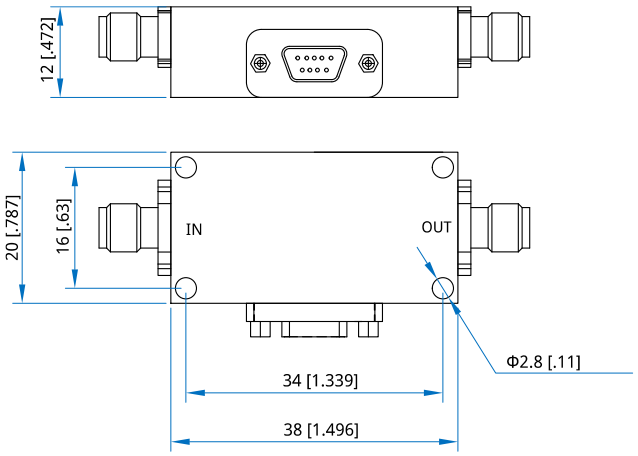

Unit: mm [in]
Tolerance: ±0.2mm [±0.008in]

Pin Numbering

Pin	Function	Pin	Function
1	NC	6	4dB
2	-5V	7	8dB
3	GND	8	16dB (MSB)
4	1dB (LSB)	9	NC
5	2dB		

How To Order

NDA-8000-12000-31-1

Customization is available upon request.

Digital Controlled Attenuator

NDA-8000-18000-63.75-0.25

8~18GHz, 63.75dB, 0.25dB

Features:
* Broadband
* High Dynamic Range

Applications:
* Wireless
* Transmitter
* Laboratory Test
* Radar

Electrical

Frequency:	8~18GHz
Insertion Loss:	7.5dB max.
Attenuation Flatness:	±0.4dB typ. @0.25~10dB
	±0.8dB typ. @10.25~30dB
	±1.5dB typ. @30.25~63.75dB
Step:	0.25dB
Attenuation Range:	0~63.75dB
Attenuation Accuracy:	±0.4dB typ. @0.25~10dB
	±0.8dB typ. @10.25~30dB
	±1.5dB typ. @30.25~63.75dB
VSWR:	2 max.
Voltage/Current:	-5V @15mA typ.
Input Power:	+25dBm max.

Mechanical

Size*1:	32*20*12.7mm
	1.26*0.787*0.5in
RF Connectors:	SMA Female
Power Supply & Control Interface Connectors:	J30J-15ZKP
Mounting:	4-Φ2.7 through-hole
Logic Input:	On: 1(+3~+5V)
	Off: 0(0~+0.5V)

[1] Exclude connectors.

Pin Numbering

Pin	Function	Pin	Function
1	-5V	7	C4
2	COM	8	C5
3	NC	9	C6
4	C1	10	C7
5	C2	11	C8
6	C3	12~15	NC

Environmental

Operating Temperature:	-45~+85℃
Non-operating Temperature:	-55~+125℃

Outline Drawings

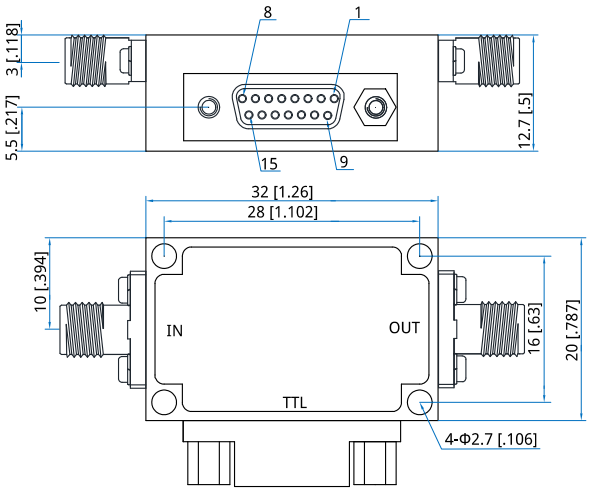

Unit: mm [in]
Tolerance: ±0.2mm [±0.008in]

Logic Table

State	C1	C2	C3	C4	C5	C6	C7	C8	Attenuation State
-	0	0	0	0	0	0	0	0	Reference IL
1	1	0	0	0	0	0	0	0	0.25dB
2	0	1	0	0	0	0	0	0	0.5dB
3	0	0	1	0	0	0	0	0	1dB
4	0	0	0	1	0	0	0	0	2dB
5	0	0	0	0	1	0	0	0	4dB
6	0	0	0	0	0	1	0	0	8dB
7	0	0	0	0	0	0	1	0	16dB
8	0	0	0	0	0	0	0	1	32dB
9	1	1	1	1	1	1	1	1	63.75dB

How To Order

NDA-8000-18000-63.75-0.25

Customization is available upon request.

Digital Controlled Attenuator

NDA-8000-18000-63-1

8~18GHz, 63dB, 1dB

Features:
* Broadband
* High Dynamic Range

Applications:
* Wireless
* Transmitter
* Laboratory Test
* Radar

Electrical

Frequency:	8~18GHz
Insertion Loss:	8dB max.
Attenuation Flatness:	±1dB max.
Control Bits:	6
Step:	1dB
Attenuation Range:	0 ~ 63dB
Attenuation Accuracy:	5% of attenuation setting max.
Switching Time:	100nS max.
VSWR:	2 max. @Attenuation 0dB
Voltage:	+5V/-5V DC
Current:	0.1A typ.
Input Power:	27dBm max.

Mechanical

Size[*1]:	38*20*12mm 1.496*0.787*0.472in
RF Connectors:	SMA female
Power Supply & Control Interface Connectors:	J30J-15ZKP
Mounting:	4-Φ2.7mm through-hole

[1] Exclude connectors.

Environmental

Operating Temperature:	-40~+70℃
Non-operating Temperature:	-55~+70℃

Outline Drawings

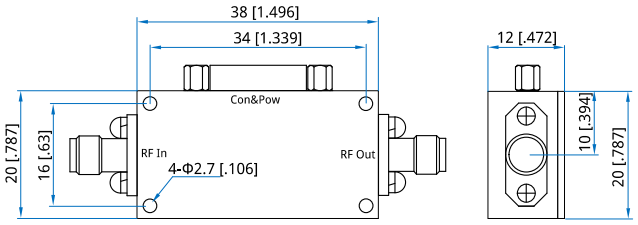

Unit: mm [in]
Tolerance: ±0.2mm [±0.008in]

Pin Numbering

Pin	Function	Pin	Function
1	+5V	7	8dB
2	-5V	8	16dB
3	GND	9	32dB
4	1dB	10~14	NC
5	2dB	15	GND
6	4dB		

How To Order

NDA-8000-18000-63-1

Customization is available upon request.

Digital Controlled Attenuator

NDA-8000-18000-70-1

8~18GHz, 70dB, 1dB

Features:
* Broadband
* High Dynamic Range

Applications:
* Wireless
* Transmitter
* Laboratory Test
* Radar

Electrical

Frequency:	8~18GHz
Insertion Loss:	11dB max.
Attenuation Flatness:	±1.5dB max.
Control Bits:	7
Step:	1dB
Attenuation Range:	0 ~ 70dB
Attenuation Accuracy:	5% of attenuation setting max.
Switching Time:	100nS max.
VSWR:	2 max. @Attenuation 0dB
Voltage:	+5V/-5V DC
Current:	0.1A typ.
Input Power:	27dBm max.

Mechanical

Size[*1]:	38*20*12mm 1.496*0.787*0.472in
RF Connectors:	SMA female
Power Supply & Control Interface Connectors:	J30J-15ZKP
Mounting:	4-Φ2.7mm through-hole

[1] Exclude connectors.

Environmental

Operating Temperature:	-40~+70℃
Non-operating Temperature:	-55~+70℃

Outline Drawings

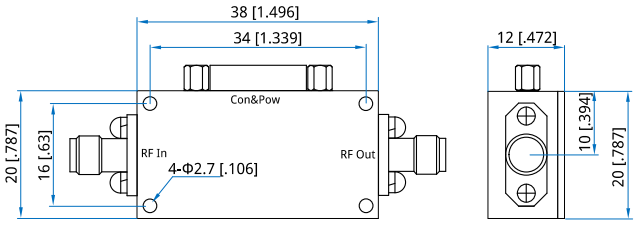

Unit: mm [in]
Tolerance: ±0.2mm [±0.008in]

Pin Numbering

Pin	Function	Pin	Function
1	+5V	7	8dB
2	-5V	8	8dB
3	GND	9	16dB
4	1dB	10	32dB
5	2dB	11~14	NC
6	4dB	15	GND

How To Order

NDA-8000-18000-70-1

Customization is available upon request.

Digital Controlled Attenuator

NDA-8200-12400-61-1

8.2~12.4GHz, 61dB, 1dB

Features:
* Broadband
* High Dynamic Range

Applications:
* Wireless
* Transmitter
* Laboratory Test
* Radar

Electrical

Frequency:	8.2~12.4GHz
Insertion Loss:	7dB max.
Attenuation Flatness:	±2dB max.
Control Bits:	6
Step:	1dB
Attenuation Range:	0~61dB
Attenuation Accuracy:	±4% of attenuation setting max.
Switching Time:	500nS max.
Input VSWR:	2.2 max.
Output VSWR:	2.2 max.
Voltage:	-5V DC
Current:	0.1A typ.
Input Power Without Damage:	30dBm max.
Peak Power:	57dBm
Duty Cycle:	0.2% max.

Mechanical

Size[*1]:	38*20*12mm 1.496*0.787*0.472in
RF Connectors:	SMA Female
Power Supply & Control Interface Connectors:	J30J-9ZKP
Housing Material:	Aluminum
Mounting:	4-Φ2.8mm through-hole

[1] Exclude connectors.

Environmental

Operating Temperature:	-40~+60℃
Non-operating Temperature:	-55~+70℃

Outline Drawings

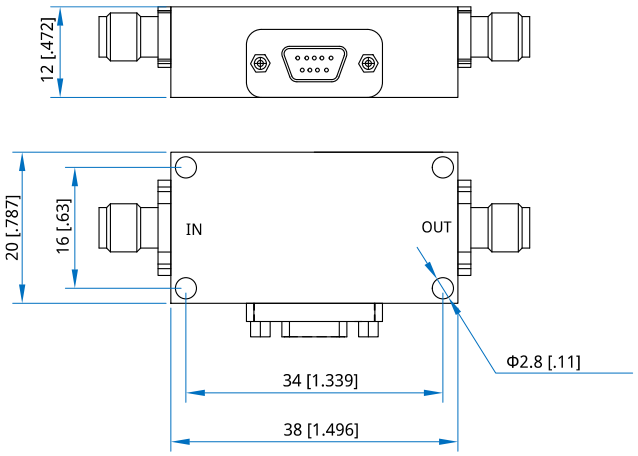

Unit: mm [in]
Tolerance: ±0.2mm [±0.008in]

Pin Numbering

Pin	Function	Pin	Function
1	NC	6	4dB
2	-5V	7	8dB
3	GND	8	16dB
4	1dB (LSB)	9	30dB (MSB)
5	2dB		

How To Order

NDA-8200-12400-61-1

Customization is available upon request.

Digital Controlled Attenuator

NDA-8500-9500-31.5-0.25

8.5~9.5GHz, 31.5dB, 0.25dB

Features:
* Broadband
* High Dynamic Range

Applications:
* Wireless
* Transmitter
* Laboratory Test
* Radar

Electrical

Frequency:	8.5~9.5GHz
Insertion Loss:	5.5dB typ.
Attenuation Range:	0~31.5dB
Step:	0.25dB
Attenuation Accuracy:	3~5% of attenuation setting typ.
VSWR:	2 max.
Voltage:	+12V DC
Input Power:	+30dBm max.
Impedance:	50Ω

Mechanical

Size*1:	30*20*8mm 1.181*0.787*0.315in
Weight:	100g max.
RF Connectors:	SMA Female
Mounting:	3-M2.5 through hole 4-M2, depth 4mm

Environmental

Operating Temperature:	-40~+60℃
Non-operating Temperature:	-55~+85℃

Outline Drawings

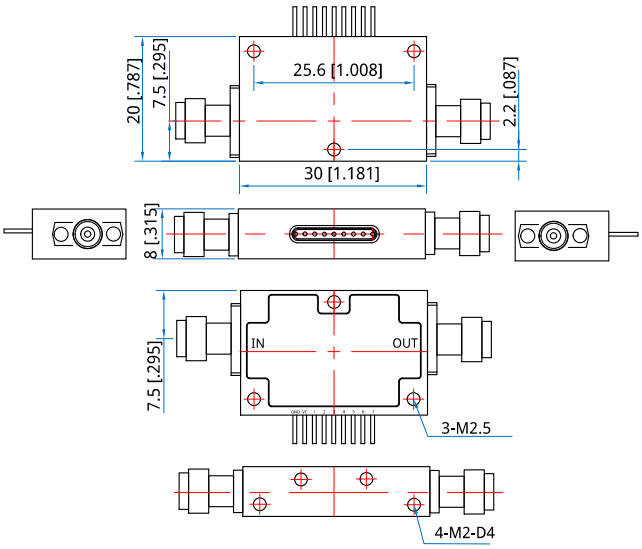

Unit: mm [in]
Tolerance: ±0.2mm [±0.008in]

How To Order

NDA-8500-9500-31.5-0.25

Customization is available upon request.

Digital Controlled Attenuator

NDA-9000-10000-47.5-0.5

9~10GHz, 47.5dB, 0.5dB

Features:
* Broadband
* High Dynamic Range

Applications:
* Wireless
* Transmitter
* Laboratory Test
* Radar

Electrical

Frequency:	9~10GHz
Insertion Loss:	5.5dB max.
Attenuation Flatness:	±0.75dB max.
Control Bits:	7
Step:	0.5dB
Attenuation Range:	0 ~ 47.5dB
Attenuation Accuracy:	3% of attenuation setting max.
Switching Time:	100nS max.
VSWR:	1.8 max. @Attenuation 0dB
Voltage:	+5V DC
Current:	0.2A typ.
Input Power:	27dBm max.

Mechanical

Size[*1]:	45*35*15mm
	1.772*1.378*0.591in
RF Connectors:	SMA Female
Power Supply & Control Interface Connectors:	J30J-9ZKP
Mounting:	4-Φ2.8mm through-hole

[1] Exclude connectors.

Environmental

Operating Temperature:	-40~+70℃
Non-operating Temperature:	-55~+70℃

Outline Drawings

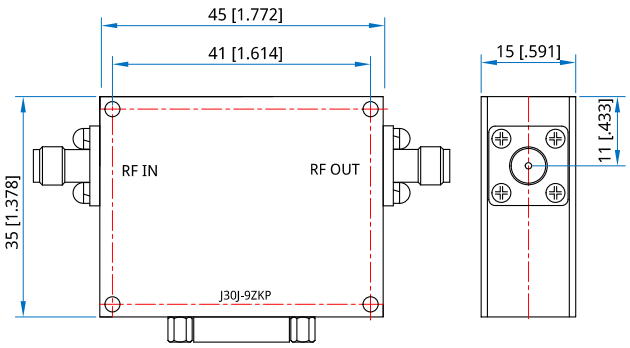

Unit: mm [in]
Tolerance: ±0.2mm [±0.008in]

Pin Numbering

Pin	Function	Pin	Function
1	+5V	6	4dB
2	GND	7	8dB
3	0.5dB	8	16dB
4	1dB	9	16dB
5	2dB		

How To Order

NDA-9000-10000-47.5-0.5

Customization is available upon request.

Digital Controlled Attenuator

NDA-9K-20000-31.5-0.5

9K~20GHz, 31.5dB, 0.5dB

Features:
* Broadband
* High Dynamic Range

Applications:
* Wireless
* Transmitter
* Laboratory Test
* Radar

Electrical

Frequency:	9K~20GHz
Insertion Loss:	6dB max.
Attenuation Flatness:	±0.7dB typ. @0.5~16dB
	±1dB typ. @17.5~31.5dB
Step:	0.5dB
Attenuation Range:	0~31.5dB
Attenuation Accuracy:	±0.8dB typ. @0.5~16dB
	±1dB typ. @17.5~31.5dB
VSWR:	2 max.
Voltage/Current:	-5V @15mA typ.
Input Power:	+25dBm max.

Mechanical

Size[*1]:	32*20*12.7mm
	1.26*0.787*0.5in
RF Connectors:	SMA Female
Power Supply & Control Interface Connectors:	J30J-15ZKP
Mounting:	4-Φ2.7mm through-hole
Logic Input:	On: 1(+3~+5V)
	Off: 0(0~+0.5V)

[1] Exclude connectors.

Pin Numbering

Pin	Function	Pin	Function
1	-5V	7	C4:-4dB
2	GND	8	C5:-8dB
3	NC	9	C6:-16dB
4	C1:-0.5dB	10	NC
5	C2:-1dB	11~15	NC
6	C3:-2dB		

Environmental

Operating Temperature:	-45~+85°C
Non-operating Temperature:	-55~+125°C

Outline Drawings

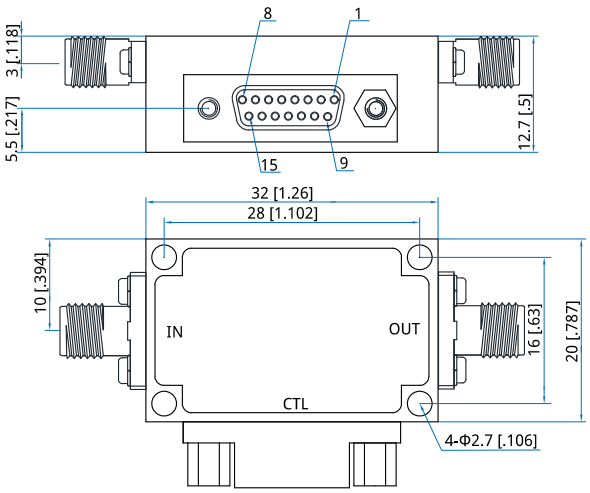

Unit: mm [in]
Tolerance: ±0.2mm [±0.008in]

Logic Table

State	C1	C2	C3	C4	C5	C6	Attenuation State
-	0	0	0	0	0	0	Reference IL
1	1	0	0	0	0	0	0.5dB
2	0	1	0	0	0	0	1dB
3	0	0	1	0	0	0	2dB
4	0	0	0	1	0	0	4dB
5	0	0	0	0	1	0	8dB
6	0	0	0	0	0	1	16dB
7	1	1	1	1	1	1	31.5dB

How To Order

NDA-9K-20000-31.5-0.5

Customization is available upon request.